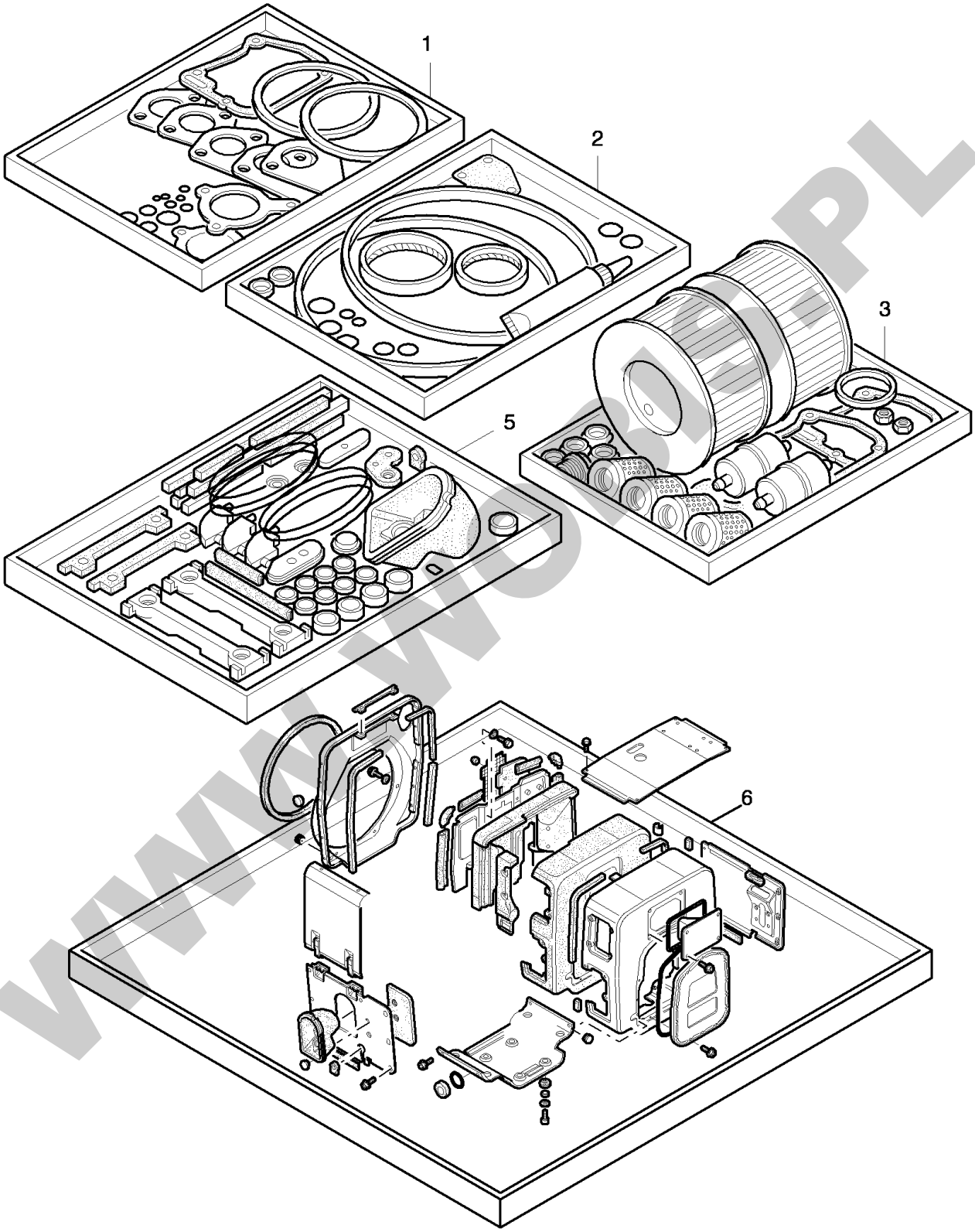

WWW.WOBIS.PL

Pos.	Part no.	Description	Qty.	Parts return	Notice	Add. notice	kg	dDPW	List price
1	000001505101	GSKT.S.CYL.HEAD D41	1		Gasket set for 1 cyl. Head part was replaced by 000001505102		0,160		
2	000001279803	GASK.S.CRNKC.D30-50	1				0,250		478,57
3	000001292610	MAINT KIT 1D30/50 3	1				1,130		268,31
3	000001279910	MAINT.KIT D30/D50 1	1				1,200		365,55
5	000001502100	RUBB.COMP.S.D30/41C	1				1,500		684,09
6	_nopart	Not in this engine	-						

WWW.WOBIS.PL

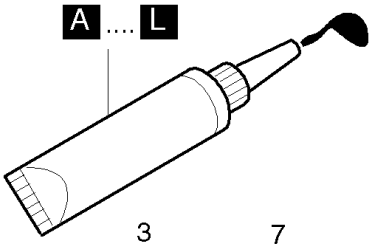

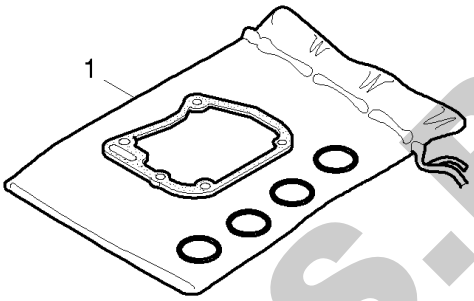

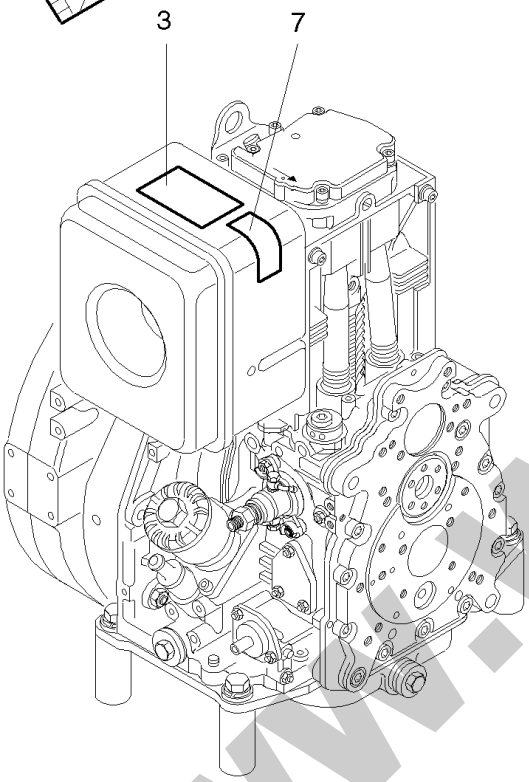

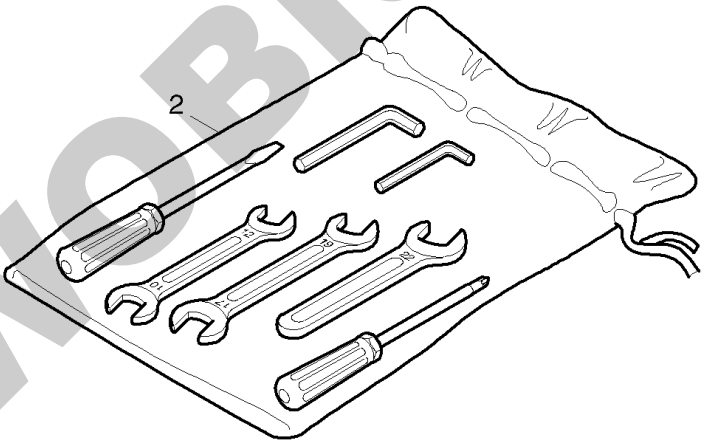

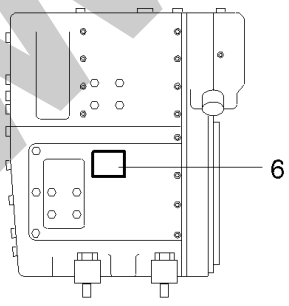

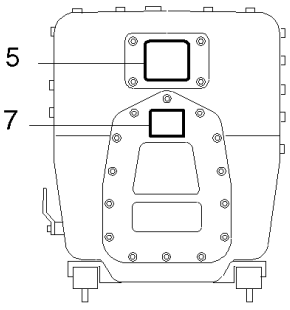

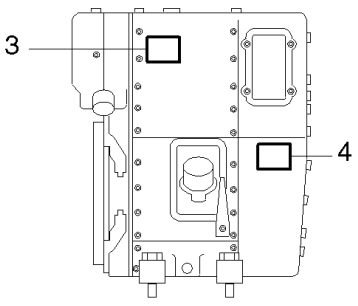

WWW.WOBIS.PL

Pos.	Part no.	Description	Qty.	Parts return	Notice	Add. notice	kg	dDPW	List price
1	000001247512	ACCESSORIES KIT1D..	1		Zubehörsatz - Accessories kit		0,019		17,84
2	000001247600	TOOLS 1D30...1D81	1				0,465		76,39
3	000004048304	STICKER LABEL	1				0,001		7,74
4	000003614401	STICKER LABEL	1		part was replaced by 000003614402	""C""	0,001		8,46
5	000005034700	STICKER SILENT PACK	1			""C""	0,002		15,24
6	000003614401	STICKER LABEL	1		part was replaced by 000003614402	""C""	0,001		8,46
7	000005025200	STICKER CR-START	1		Handstart, demarr. man. part was replaced by 000005025201		0,001		8,46
A	000050223001	LOCTITE ACTIVATOR N	1		500 ML DIN 7649		0,580		280,83
B	000050223101	LOCTITE 574	1		50 ML		0,088		102,74
C	000050223200	LOCTITE 601	1		50 ML		0,079		102,74
D	000050223300	LOCTITE 221	1		50 ML		0,077		102,74
E	000050223400	LOCTITE 648	1				0,021		40,04
F	000050223900	TECHNICOLL CLEANER	1		750 GR		0,870		104,97
F	000050223800	TECHNICL.ADHES.8058	1		750 GR		0,875		137,73
G	000050256501	LOCTITE IS 407	1				0,033		54,10
H	000070018944		1				0,400		142,64
J	000050283004	HIGH TEMP.PASTE	1				0,110		74,30
K	000050342600	GREASE START.DEVICE	1		100 GRAMM part was replaced by 000050342601		0,100		
L	000050256600	SILICON SEALER	1				0,130		200,56
M	000050485100	GRINDING PASTE 80ML	1				0,113		100,05

WWW.WOBIS.PL

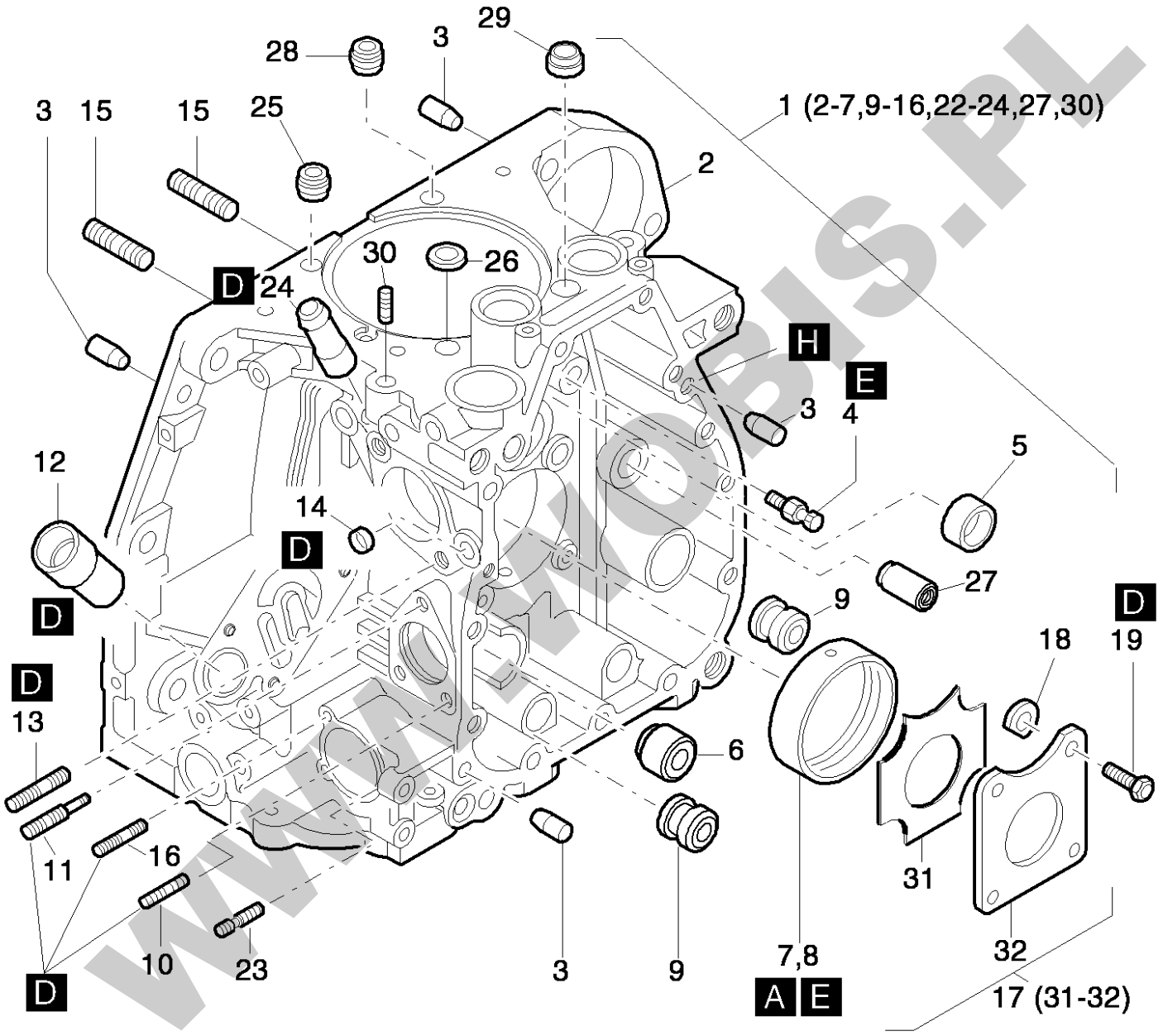
29
28
3
1 (2-7,9-16,22-24,27,30)
3
15
15
25
2
30
26
D
24
H
E
3
4
5
12
14
D
27
D
9
18
19
D
D
13
6
16
11
31
10
23
3
9
7,8
32
D
A
E
17 (31-32)

WWW.WOBIS.PL

Pos.	Part no.	Description	Qty.	Parts return	Notice	Add. notice	kg	dDPW	List price
1	000001270260	CRANKCASE EPA2	1				7,864		2886,16
2	_noorder	No single order	-						
3	000050249102	CYL.PIN 8M 6 X 20	4		8 M 6 x 20 2-Fasen		0,005		2,64
4	000004022602	NOZZLE	1				0,004		17,79
5	000003793801	BEARING BUSH	1				0,008		
6	000004022700	PLUG	0... 1		ø 25 mm	""S""	0,025		15,42
7	000004022500	MAIN BEARING	1				0,058		111,75
8	000004048800	MAIN BEARING 0,5-	1		- 0,5 mm		0,100		155,75
9	000004023600	PLUG	1... 2		ø 25 mm	s.Grp. Z01b Pos4	0,020		15,42
10	000050144300	STUD M 6X 16	2		M 6 x 16 DIN 835 - 8.8 A3C		0,005		4,14
11	000003794510	STUD	1				0,007		14,65
12	000003794800	INTERMEDIATE PIECE	1				0,050		27,71
13	000050601200	STUD M 8X 25	2		M 8 x 25 DIN 835-10.9 A3B		0,012		
14	000050325500	COVER 10	1		10 DIN 443-St A3C		0,001		1,46
15	000050602900	STUD M 8X 22	8		M 8 x 22 DIN 835-10.9		0,012		
16	000050328200	STUD M6X22	2		M 6 x 22 DIN 835 - 8.8 A3C		0,006		5,01
17	000002228000	THRUST PLATE	1				0,119		
18	000004069600	SHIM 1,2	0... 4		1,20 mm	End play 0,1-0,4mm	0,002		3,28
18	000004069500	SHIM 1,05	0... 4		1,05 mm	Axialspiel 0,1-0,4mm	0,001		3,28
19	000004062010	HEXSCREW M9 X 28	4		M 9 x28		0,017		9,51
23	000050328200	STUD M6X22	1		M 6 x 22 DIN 835 - 8.8 A3C		0,006		5,01
24	_noorder	No single order	-						
25	000050458400	GASKET	2				0,002	d2	7,14
26	000050392000	JOINT 9,3X 14	2		9,3 x 14		0,001	d2	7,37

WWW.WOBIS.PL

Pos.	Part no.	Description	Qty.	Parts return	Notice	Add. notice	kg	dDPW	List price
27	000004105000	PLUG 15MM	1		ø 15 mm	""S""	0,087		11,15
28	_nopart	Not in this engine	-						
29	_nopart	Not in this engine	-						
30	000050262400	THREADED PIN M 6X10	0... 1		M 6 x 10 DIN 916-Tuf. 360 G		0,001		4,87
31	_noorder	No single order	-						
32	_noorder	No single order	-						
A	000050223001	LOCTITE ACTIVATOR N	1		500 ML DIN 7649		0,580		280,83
D	000050223300	LOCTITE 221	1		50 ML		0,077		102,74
E	000050223400	LOCTITE 648	1				0,021		40,04
H	000070018944		1				0,400		142,64

WWW.WOBIS.PL

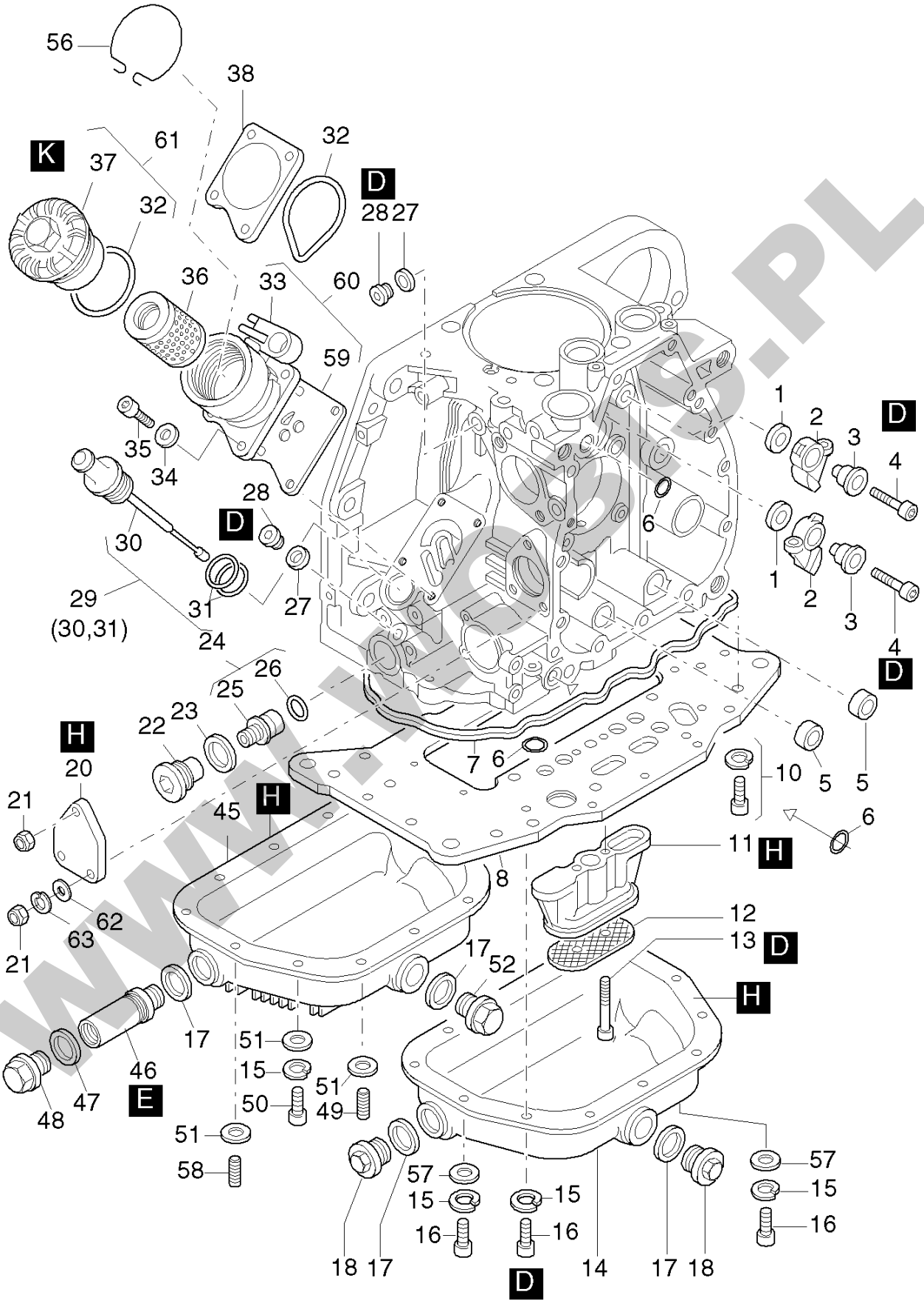
56
38
32
61
K
37
32
D
28 27
36
33
60
59
1
2
3
4
D
35
34
28
D
30
6
1
2
3
4
29
(30,31)
31
27
24
D
26
25
23
22
H
20
21
45
H
7
6
10
5
5
6
11
H
8
62
63
21
12
13
D
17
52
H
17
51
15
51
46
47
48
E
50
49
51
58
57
15
16
57
15
16
18
17
15
16
14
17
18
D

WWW.WOBIS.PL

Pos.	Part no.	Description	Qty.	Parts return	Notice	Add. notice	kg	dDPW	List price
1	000003794100	WASHER	2		10,1 x 22 x 3		0,006		10,78
2	000003794300	CAM FOLLOWER	2				0,041		172,81
3	000003794201	CAM FOLLOW SPINDLE	2				0,018		41,86
4	000050545501	ALL.SCR.M 6X 30	2		M 6 x 30 DIN 912-10.9 KL 360 912-10.9KL360G		0,009		1,77
5	000003795800	O-RING 12X18,3X7,3	2		12 x 18,3 x 7,3		0,002	D2	13,38
6	000050329000	O-RING 9,5X2,5	3		9,5 x 2,5		0,001	D3	3,00
7	000003795100	O-RING265X269,4X3,6	1		265 x 269,4 x 3,6		0,013	D1	85,86
8	000001270300	PLATE	1				2,430		444,85
10	000050417600	ALL.SCR. M 8X25 Z4	22		M 8 x 25 Z4 DIN 912-8.8 A3C		0,015		3,14
11	000004023300	HOUSING	1				0,097		47,91
12	000003795000	SUCTION SIEVE	1				0,013		15,24
13	000050051100	ALL.SCR.M 6X 30	2		M 6 x 30 DIN 6912-8.8		0,007		2,82
14	000001255410	OIL SUMP	1				0,668		190,55
15	000050170900	SPRING WASHER 6	12		6 DIN 128 - A3C		0,001		0,46
16	000050329100	ALL.SCR.M 6X10	12		M 6x10 DIN 912-8.8 Inbus Plus		0,005		2,73
17	000050001600	JOINT A22 X27	2		A 22 x 27 DIN 7603 Cu		0,002	D2,W4	2,37
18	000050373100	DRAIN PLG.MAGNT.M22	0... 2		AM22x1,5DIN7604A3C MAGN.		0,038		30,67
18	000050140400	DRAIN PLUG AM22X1,5	0... 2		AM22x1,5DIN7604-5.8A3C	""C""	0,037		7,74
20	000003794701	COVER	1				0,056		11,24
21	000050328300	HEXAGON NUT VM6	3		VM 6 DIN 980-8 A3C		0,002		1,46
22	000001321200	CLOS.SCREW + SIEVE	1		M 24 x 1,5		0,052		40,50
23	000050286400	JOINT A24X29	1		A 24 x 29 DIN 7603-Cu		0,003	D1	4,78
24	000002015700	OIL RELIEF VALVE	1		part was replaced by 000002015701		0,039		
25	_noorder	No single order	-						

WWW.WOBIS.PL

Pos.	Part no.	Description	Qty.	Parts return	Notice	Add. notice	kg	dDPW	List price
26	000050460400	O-RING 18 X 2	1		18 x 2		0,001	D1	3,00
27	000050062400	JOINT A10 X13,5	2		A 10 x 13,5 DIN 7603-Cu		0,001	D2	0,36
28	000050062300	CLOS.SCREW M10X1	2		M 10 x 1 DIN 908-5.8 A3C		0,005		4,50
29	000001255200	DIPSTICK	1				0,030		38,49
30	_noorder	No single order	-						
31	000050359700	O-RING 20,29X2,62	2		20,29 x 2,62		0,001	D2	6,87
32	000050329200	RECTANG.RNG.50X55X3	2		50 x 55 x 3		0,002	D2,W1	11,88
33	_noorder	No single order	-						
34	000050081200	SPRING WASHER A 6	4		A 6 DIN 137 - A3C		0,001		0,46
35	000050170600	ALL.SCR.M 6X 20	4		M 6 x 20 DIN 912-8.8 A3C		0,007		1,77
36	000001480000	OILFILT.ELEM.1D....	1				0,060	W4	28,53
37	_noorder	No single order	-						
38	000004033401	COVER	1				0,105		40,36
45	_nopart	Not in this engine	-			""C""			
46	000003550500	DRAIN EXTENTION	1		116 mm	""C""	0,265		122,30
47	000050001400	JOINT A18 X22	1		A 18 x 22 DIN 7603 - Cu	""C""	0,002		1,68
48	000050044200	CLOS.SCREW M18X1,5	1		M 18 x 1,5 DIN 910	""C""	0,047		10,60
49	000050434300	STUD M 8X 18	2		M 6 x 20 DIN 939-8.8 "C"	""C""	0,009		3,55
50	_nopart	Not in this engine	-			""C""			
51	_nopart	Not in this engine	-			""C""			
52	000050140400	DRAIN PLUG AM22X1,5	1		AM22x1,5DIN7604-5.8A3C	""C""	0,037		7,74
56	000004084001	LIFTING SPRING	1				0,001		7,96
57	000050144500	FLAT WASHER 6,4	2		6,4 DIN 125-St A3C		0,001		0,46
58	000050139201	STUD M 6X 16	2		M6 x 16 DIN 939-8.8 A3C	""C""	0,004		1,55

WWW.WOBIS.PL

Pos.	Part no.	Description	Qty.	Parts return	Notice	Add. notice	kg	dDPW	List price
59	000005068900	GASKET	1				0,006	D1	10,24
60	000001318300	LUB.OIL FILT.HOUSG.	1				0,281		133,82
61	000001248901	COVER F.OILFILTER	1				0,102		79,99
62	000050144500	FLAT WASHER 6,4	2		6,4 DIN 125-St A3C		0,001		0,46
63	000050170900	SPRING WASHER 6	2		6 DIN 128 - A3C		0,001		0,46
D	000050223300	LOCTITE 221	1		50 ML		0,077		102,74
E	000050223400	LOCTITE 648	1				0,021		40,04
H	000070018944		1				0,400		142,64
K	000050342600	GREASE START.DEVICE	1		100 GRAMM part was replaced by 000050342601		0,100		

WWW.WOBIS.PL

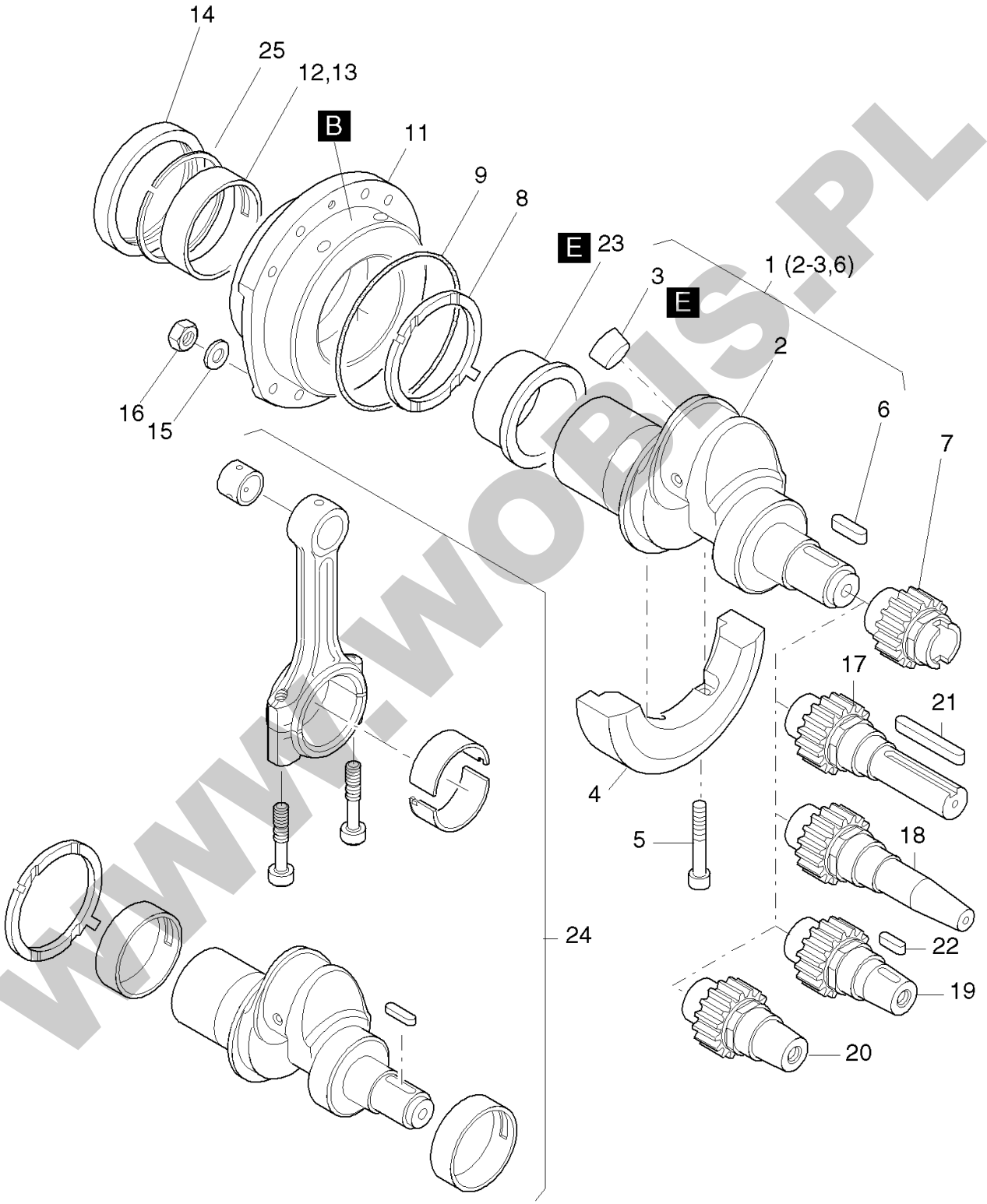

WWW.WOBIS.PL

Pos.	Part no.	Description	Qty.	Parts return	Notice	Add. notice	kg	dDPW	List price
1	000001337210	CRANKSHAFT 1D50	1				3,000		1452,31
2	_noorder	No single order	-						
3	000050345800	COVER 22	1		22 DIN 443		0,999		7,46
4	000004023502	COUNTER WEIGHT	1				0,550		91,86
5	000050127901	ALL.SCR. M 8X 40	2		M 8 x 40 DIN 912 - 12.9		0,020		2,55
6	000050362600	FITTINGKEY A 6 X 4 X 32	1		A 6 x 4 x 32 DIN 6885 St 60		0,006		2,82
7	000003796120	GEARWHEEL F. CRANKS	1				0,225		472,38
8	000004024600	BUFFER RING	1				0,012		76,26
9	000050349700	O-RING 100X2,5	1		100 x 2,5		0,002	D1	13,97
11	000004136300	BEARING FLANGE	1				2,115		510,65
12	000004024500	MAIN BEARING	1				0,062		121,21
13	000004048700	MAIN BEARING 0,5-	1		- 0,5 mm		0,100		137,73
14	000050368101	OIL SEAL 52 X80 X10	1		52 x 80 x 10 part was replaced by 000050368102		0,041	D1	
15	000050413600	WASHER 8,4	8		8,4 300 HV DIN 125A-A3C		0,001		1,14
16	000050364300	HEXAGON NUT M 8	8		M 8 DIN 934 - 10.9 A3C		0,005		1,77
17	000004023120	STUBSHAFT SAE CYL.	1		SAE ...2 ø 1'' zyl., cyl.		0,666		642,14
18	000001485500	STUBSHAFT SAE TAPER	1		SAE ...4 ø 1'' keg.		0,700		628,63
19	000004022910	STUBSHAFT ITALIA	1		ITAL. ...3 ø 30 mm tap.		0,445		887,48
20	000005033200	STUB SHAFT ITAL. 23	1		ITAL. ...6 ø 23 mm con.		0,400		626,22
21	000005141600	FITTINGKEY 6,35X61	1		A 6,35 x 61		0,018		6,51
22	000050017800	WOODRUFF KEY 4X6,5	1		4 x 6,5 DIN 6888		0,003		1,77
23	_nopart	Not in this engine	-						
24	000001921400	REP.SET CKRS. 1D50	1		1D42, 1D50		4,120		1732,32
25	000050458000	CIRCLIP SB 60	1		SB 60		0,005		3,46

WWW.WOBIS.PL

Pos.	Part no.	Description	Qty.	Parts return	Notice	Add. notice	kg	dDPW	List price
B	000050223101	LOCTITE 574		●	50 ML		0,088		102,74
E	000050223400	LOCTITE 648	1	●			0,021		40,04

WWW.WOBIS.PL

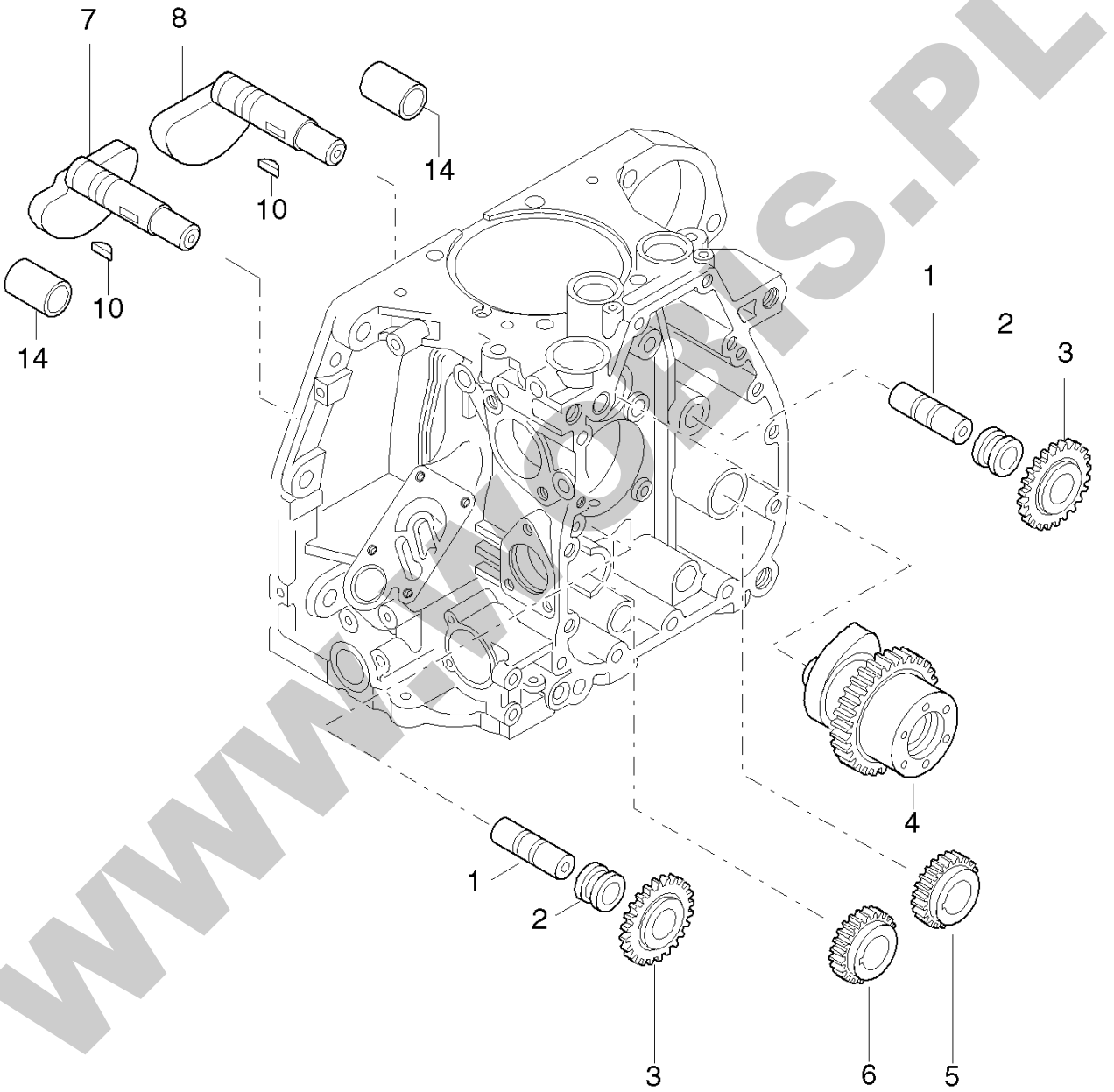

WWW.WOBIS.PL

Pos.	Part no.	Description	Qty.	Parts return	Notice	Add. notice	kg	dDPW	List price
1	000003796401	SHAFT	2	●		Z,C	0,072		55,92
2	000003796500	BUSH	1... 2	●		Z,C	0,028		22,57
3	000001242000	GEARWHEEL	2	●		Z,C	0,176		331,38
4	000004283000	CAMSHAFT EPA4	1	●		S,Z,C	1,255		
5	000003796800	GEARWHEEL	1	●	Z, U, C	Z,C	0,107		285,60
6	000003796900	GEARWHEEL	1	●	Z, U, C	Z,C	0,107		285,88
7	000004023710	SHAFT PUMP SIDE	1	●		Z,C	0,490		340,93
8	000004023810	SHAFT STARTER SIDE	1	●		Z,C	0,490		340,93
10	000050324900	WOODRUFF KEY 3X3,7	2	●	3 x 3,7 DIN 6888 St 60 Z, U, C	Z,C	0,001		2,46
14	000004023900	BUSH	2	●		Z,C	0,052		57,88

WWW.WOBIS.PL

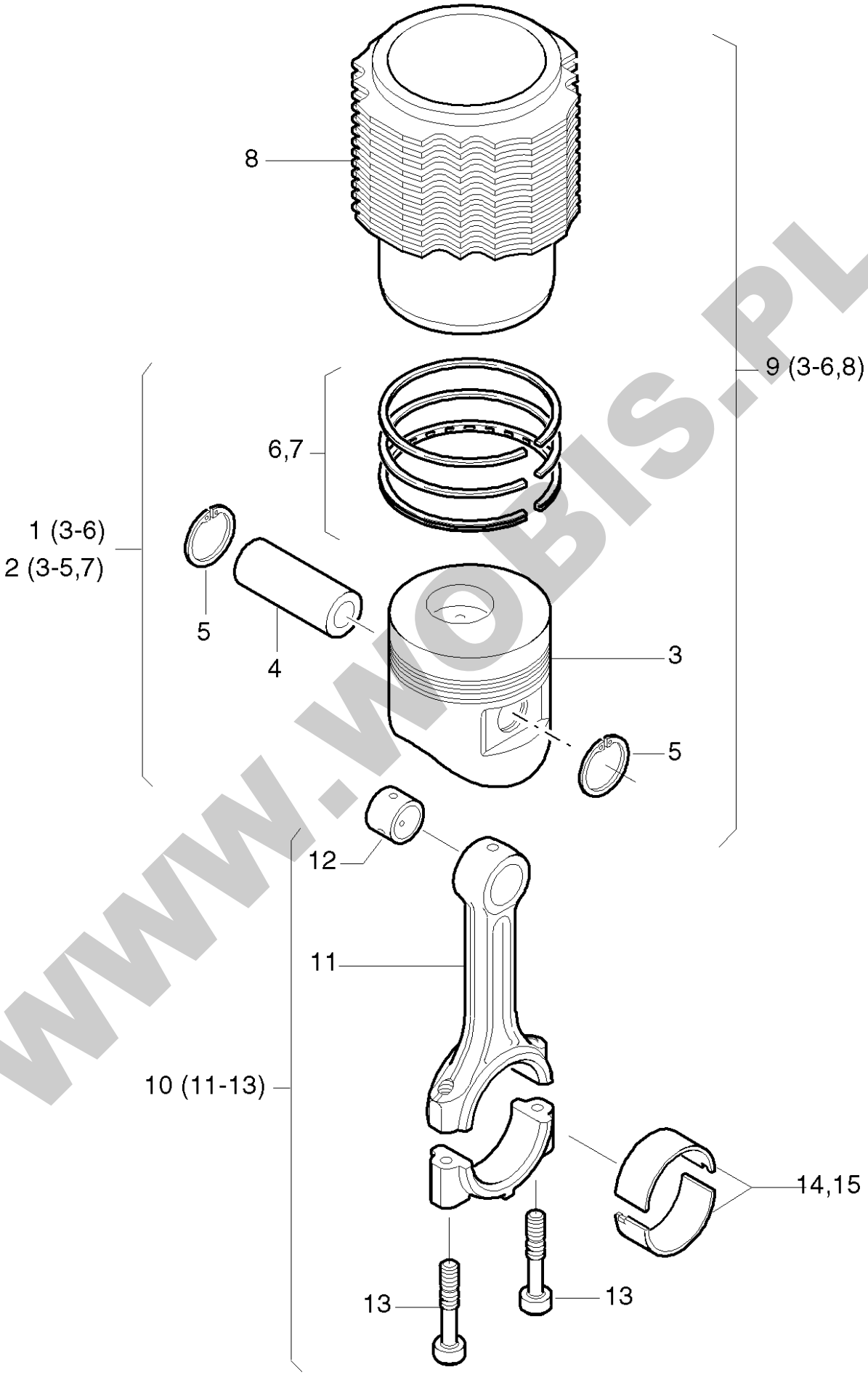

WWW.WOBIS.PL

Pos.	Part no.	Description	Qty.	Parts return	Notice	Add. notice	kg	dDPW	List price
1	000002015200	PISTON 90 EPA4	1				0,766		
2	000002015300	PISTON 90 +0,5EPA4	1		+ 0,5 mm		0,766		
2	000002015400	PISTON 90 +1,0EPA4	1		+ 1,0 mm		0,766		
3	_noorder	No single order	-						
4	000050416100	GUDGEON PIN 25X68	1		25 x 13 x 68 DIN 73126-B2		0,190		115,66
5	000050381210	CIRCLIP 25 X 1,2	2		A 25 x 1,2		0,001		6,87
6	000001312501	PISTON RING SET 90	1		90		0,050		175,49
7	000001315401	PIST.RING SET90+0,5	1		+ 0,5 mm		0,100		382,70
7	000001315501	PIST.RING SET90+1,0	1		+ 1,0 mm		0,100		382,43
8	_noorder	No single order	-						
9	000002258900	CYL. W. PISTON EPA4	1				2,786		
10	000001258302	CONROD	1				0,590		727,55
11	_noorder	No single order	-						
12	000004065600	BUSH FOR CONROD	1				0,015		59,56
13	000004100500	CONROD SCREW	2				0,025		19,16
14	000002251600	BIG END BEARING 1D41/50	1				0,036		
15	000002252000	BIG END BEARING 0,5-1D41/50	1		- 0,5 mm		0,038		

WWW.WOBIS.PL

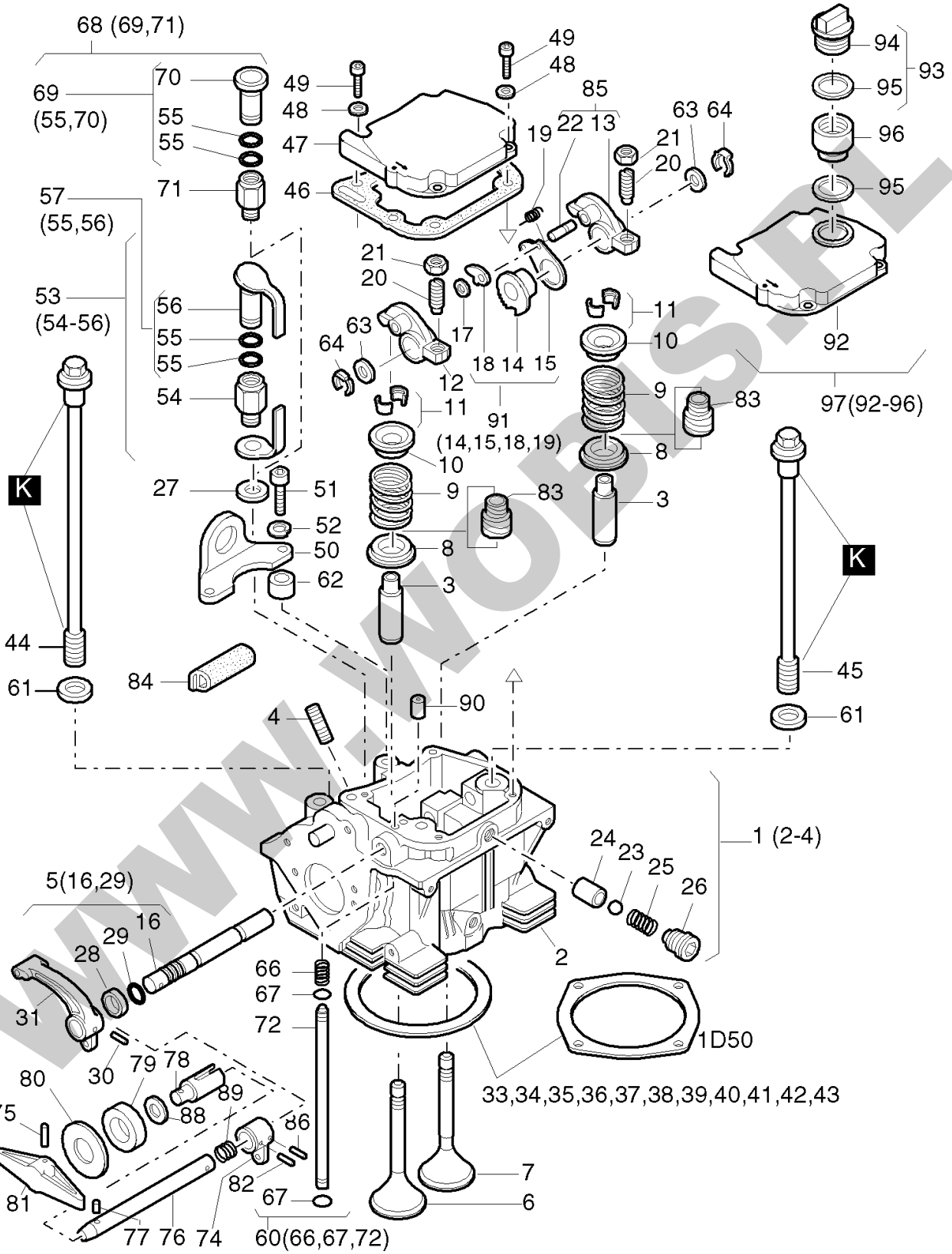
68 (69,71)
69
(55,70)
70
55
55
71
57
(55,56)
53
(54-56)
56
55
55
54
27
51
52
50
62
44
61
84
49
48
47
46
49
48
85
22 13
19
21
20
63 64
21
20
17
18 14 15
12
91
(14,15,18,19)
11
10
9
83
8
3
11
10
9
83
8
3
94
93
95
96
95
92
97(92-96)
K
K
45
61
4
90
1 (2-4)
24
23
25
26
2
5(16,29)
16
29
28
31
30
66
67
72
1D50
33,34,35,36,37,38,39,40,41,42,43
79 78
80
89
88
75
86
82
81
77 76 74
67
60(66,67,72)
7
6

WWW.WOBIS.PL

Pos.	Part no.	Description	Qty.	Parts return	Notice	Add. notice	kg	dDPW	List price
1	000001858601	CYL.HEAD 1D41/42 EPA4	1				3,148		
2	_noorder	No single order	-						
3	000004137500	VALVE GUIDE	2				0,024		74,48
4	000050279200	STUD M 8X 40	1		M 8 x 40 DIN 835-8.8 A3C		0,019		4,05
5	000001290920	ROCKER SHAFT D31/41	1				0,110		215,53
6	000004246800	VALVE INLET	1		EPA2		0,067		64,97
7	000004246900	VALVE EXHAUST	1		EPA2		0,058		81,31
8	000004005201	WASHER	2				0,015		17,79
9	000004029300	VALVE SPRING	2				0,026		18,20
10	000004029201	CUP	2				0,020		33,85
11	000002252400	COLLET	2				0,002		
12	000004003710	ROCKER INLET	1				0,055		184,59
13	_noorder	No single order	-						
14	_noorder	No single order	-						
15	000003778401	SPRING SHEET	1				0,002		2,91
16	_noorder	No single order							
17	000050117200	CIRCLIP	1		RA 4ME DIN 6799		0,001		0,46
18	000003365710	RATCHET F.DECOMPR.	1				0,004		31,44
19	000003366001	SPRING	1				0,001		5,82
20	000003783000	ADJUSTING SCREW	2				0,008		19,66
21	000003173100	HEXAGON NUT	2				0,004	W2	5,32
22	_noorder	No single order	-						
23	000050123800	BALL 7 MM G100	1		7 mm III DIN 5401		0,001		2,05
24	000004004700	BUSH	1				0,016		47,50

WWW.WOBIS.PL

Pos.	Part no.	Description	Qty.	Parts return	Notice	Add. notice	kg	dDPW	List price
25	000004004800	PRESSURE SPRING	1				0,003		3,82
26	000001245200	ADJUSTING SCREW	1				0,005		33,40
27	000050001100	JOINT A12 X15,5	1		A 12 x 15,5 DIN 7603-Cu		0,001	d1	0,86
28	_nopart	Not in this engine	-						
29	000040022401	O-RING 8 X 2 GRAY	1		8 x 2 FPM 75 MOLYKOT.		0,002	d2	1,96
30	000050034700	PIN 4 X22	1		4 x 22 ISO 8752-ST		0,002		1,46
31	000004009810	HANDLE	1				0,015		9,96
33	000004071500	GASK.F.CYL.HEAD 0,3	0... 1		0,3 mm		0,008		13,51
33	000004239500	GASK.F.CYL.H. 0,35	0... 1		0,35 mm		0,007		13,56
34	000004071600	GASK.F.CYL.HEAD 0,4	0... 1		0,4 mm		0,013		14,01
34	000004239600	GASK.F.CYL.H. 0,45	0... 1		0,45 mm		0,009		14,01
35	000004239700	GASK.F.CYL.H. 0,55	0... 1		0,55 mm		0,011		15,83
35	000004071700	GASK.F.CYL.HEAD 0,5	0... 1		0,5 mm		0,015		15,83
36	000004071800	GASK.F.CYL.HEAD 0,6	0... 1		0,6 mm		0,014		16,79
36	000004239800	GASK.F.CYL.H. 0,65	0... 1		0,65 mm		0,013	d1	16,79
37	000004071900	GASK.F.CYL.HEAD 0,7	0... 1		0,7 mm		0,016	d1	17,65
37	000004239900	GASK.F.CYL.H. 0,75	0... 1		0,75 mm		0,015		17,65
38	000004072000	GASK.F.CYL.HEAD 0,8	0... 1		0,8 mm		0,018		19,66
38	000004240000	GASK.F.CYL.H. 0,85	0... 1		0,85 mm		0,017		19,66
39	000004072100	GASK.F.CYL.HEAD 0,9	0... 1		0,9 mm		0,020		20,98
39	000004240100	GASK.F.CYL.H. 0,95	0... 1		0,95 mm		0,019		20,98
40	000004072200	GASK.F.CYL.HEAD 1,0	0... 1		1,0 mm		0,022		23,16
40	000004240200	GASK.F.CYL.H. 1,05	0... 1		1,05 mm		0,021		23,16
41	000004072300	GASK.F.CYL.HEAD 1,1	0... 1		1,1 mm		0,024		24,71

WWW.WOBIS.PL

Pos.	Part no.	Description	Qty.	Parts return	Notice	Add. notice	kg	dDPW	List price
41	000004240300	GASK.F.CYL.H. 1,15	0... 1		1,15 mm		0,022		24,71
42	000004072400	GASK.F.CYL.HEAD 1,2	0... 1		1,2 mm		0,026		26,85
42	000004240400	GASK.F.CYL.H. 1,25	0... 1		1,25 mm		0,025		26,85
43	000004072500	GASK.F.CYL.HEAD 1,3	0... 1		1,3 mm		0,028		27,62
44	000004028600	CYL.HEAD SCREW251MM	2		251,5 mm		0,152		72,48
45	000004028500	CYL.HEAD SCREW174MM	2		174 mm		0,093		59,83
46	000004006111	GASKET	1				0,003	d1,W3	10,42
47	000001245413	COVER CYL.HEAD	1		part was replaced by 000001245414		0,248		126,49
48	000050081200	SPRING WASHER A 6	4		A 6 DIN 137 - A3C		0,001		0,46
49	000050170800	ALL.SCR.M 6X 25	4		M 6 x 25 DIN 912 - 8.8 A3C		0,008		1,91
50	000004008100	LIFTING BRACKET	1				0,071		43,04
51	000050175900	ALL.SCR.M 8X 30	2		M 8 x 30 DIN 912-8.8 A3C		0,017		2,82
52	000050208500	SPRING WASHER 8	2		8 DIN 128 A3C		0,001		1,46
53	000001493200	OIL FIL.DEV."S"4 OIL FIL.DEV.""S""4	1			S,Z,T,U	0,080		55,83
54	_noorder	No single order	-						
55	000050326200	O-RING 11,3X2,4	2		11,3 x 2,4		0,001	d2	2,46
56	_noorder	No single order	-						
57	000001308301	CLOSG.PLUG "S"46 CLOSG.PLUG ""S""46	1			S,Z,T,U	0,012		14,56
60	000001269601	OIL PRESSURE PIPE	1				0,033		33,22
61	000003794100	WASHER	4		10,1 x 22 x 3		0,006		10,78
62	000004008000	BUSH 9,2X17,2X10	2		9,2 x 17,2 x 10		0,013		7,23
63	000003457500	DISC F.STUD	2		12,5 x 24 x 2,5		0,006		7,83
64	000050353300	CIRCLIP KL14S	2				0,002		10,60

WWW.WOBIS.PL

Pos.	Part no.	Description	Qty.	Parts return	Notice	Add. notice	kg	dDPW	List price
66	000004004200	PRESSURE SPRING	1				0,001		1,82
67	000050330100	O-RING 4X 1,2	2		4 x 1,2		0,001	d2	1,05
68	000001280600	OIL FILLER DEVICE	1			""C""	0,080		73,85
69	000001275611	CLOSG.PLUG "C" 4 CLOSG.PLUG ""C"" 4	1			""C""	0,016		29,71
70	_noorder	No single order	-						
71	_noorder	No single order	-						
72	_noorder	No single order	-						
74	000004047920	INTERM.PIECE DECOMP	1			""C""	0,035		153,74
75	000050132000	ROLL PIN 4X16	1		4 x 16 ISO 8752-ST	""C""	0,002		1,46
76	000004083320	DECOMPRESSION SHAFT	1				0,055		164,21
77	000050034500	PIN 4 X14	1		4 x 14 ISO 8752-ST	""C""	0,001		1,46
78	000004048110	INTERMEDIATE PIECE	1			""C""	0,022		69,71
79	000001581600	DOUBLE SEALG.RINGS	1			""C""	0,002		19,34
80	000004048000	WASHER 10,5X50X1,0	1		10,5x50x1,0	""C""	0,002		4,64
81	000003778200	HANDLE	1			""C""	0,010		12,24
82	000050132000	ROLL PIN 4X16	1		4 x 16 ISO 8752-ST	""C""	0,002		1,46
83	000050405700	VALVE STEM SEAL CAP	2				0,002	d2	8,42
84	000004070400	SEALING STRIP	1		60 mm		0,999		9,74
85	000001285010	ROCKER EXHAUST	1				0,065		164,89
86	000050034600	PIN 4 X18	1		4 x 18 ISO 8752-ST	""C""	0,002		1,46
88	000003787300	SHIM 0,2	1		10,5 x 21 x 0,2	""C""	0,001		4,96
89	000004097200	PRES.SPRING DECOMPR	1			""C""	0,001		7,28
90	000004104900	PIN	1		(ø 5 mm)		0,001		11,51
91	000001557600	GEARWHEEL F.DECOMPR	1				0,040		153,02

WWW.WOBIS.PL

Pos.	Part no.	Description	Qty.	Parts return	Notice	Add. notice	kg	dDPW	List price
92	_noorder	No single order	-						
93	000001613100	CAP SCREW	1				0,017		13,60
94	_noorder	No single order	-						
95	000004125000	SEALING RING	2		26 x 35 x3		0,002		4,05
96	000003658400	INTERMEDIATE PIECE	1				0,031		40,50
97	000001620000	CYL.HD.COV.OIL FILL	1				0,300		193,33
K	000050342600	GREASE START.DEVICE	1		100 GRAMM part was replaced by 000050342601		0,100		

WWW.WOBIS.PL

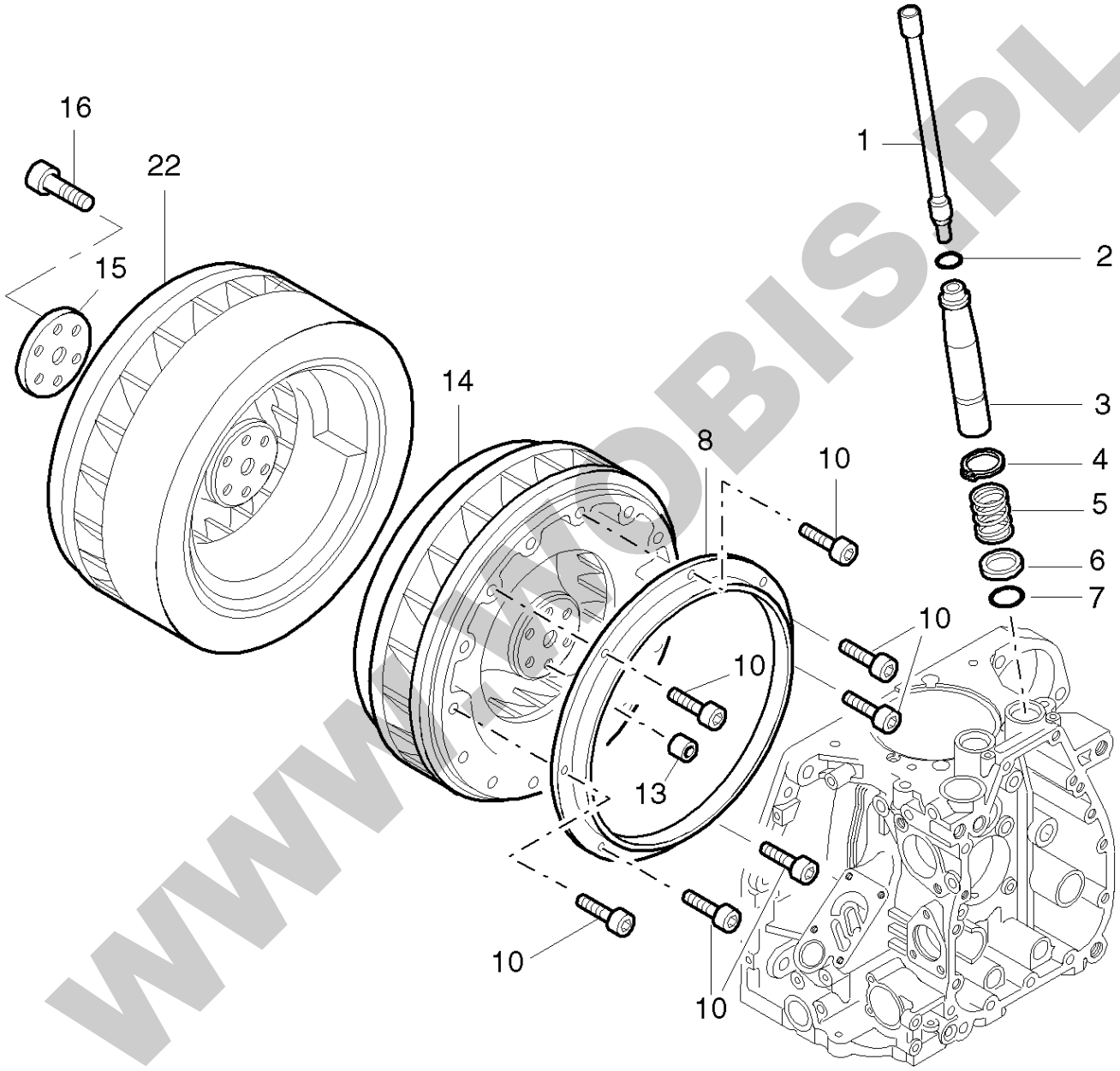

WWW.WOBIS.PL

Pos.	Part no.	Description	Qty.	Parts return	Notice	Add. notice	kg	dDPW	List price
1	000001259310	PUSHROD	2				0,048		126,13
2	000050330200	O-RING 19X3 N	2		19 x 3		0,001	d2	4,32
3	000004027200	PROTECTION TUBE	2				0,065		39,36
4	000050347000	CIRCLIP AS 24X1,75	2		AS 24 x 1,75 DIN 471		0,002		6,28
5	000004002600	PRESSURE SPRING	2				0,015		10,10
6	000004002000	PRESSURE RING	2				0,003		3,00
7	000050411300	O-RING 23X3,5 GREEN	2		23 x 3,5 grün, green, vert, verde		0,002	d2	9,01
8	000004030601	RING F.FLYWHEEL	1				0,140		41,91
10	000050397100	ALL.SCR.M 4 X 10	6		M 4 x 10 DIN 912-8.8 A3C Tuf.		0,002		2,46
13	000004033000	BUSH	1				0,004		8,87
14	000004026121	FLYWHEEL "L"	1				20,000		1154,52
15	000004026600	RETAINING PLATE	1				0,020		17,47
16	000050132800	ALL.SCR. M 10X 40	6		M 10 x 40 DIN 912 - 10.9		0,032		4,60
22	000004079901	FLYWHEEL HEAVY	1		Schwungrad schwer		24,240		1464,28

WWW.WOBIS.PL

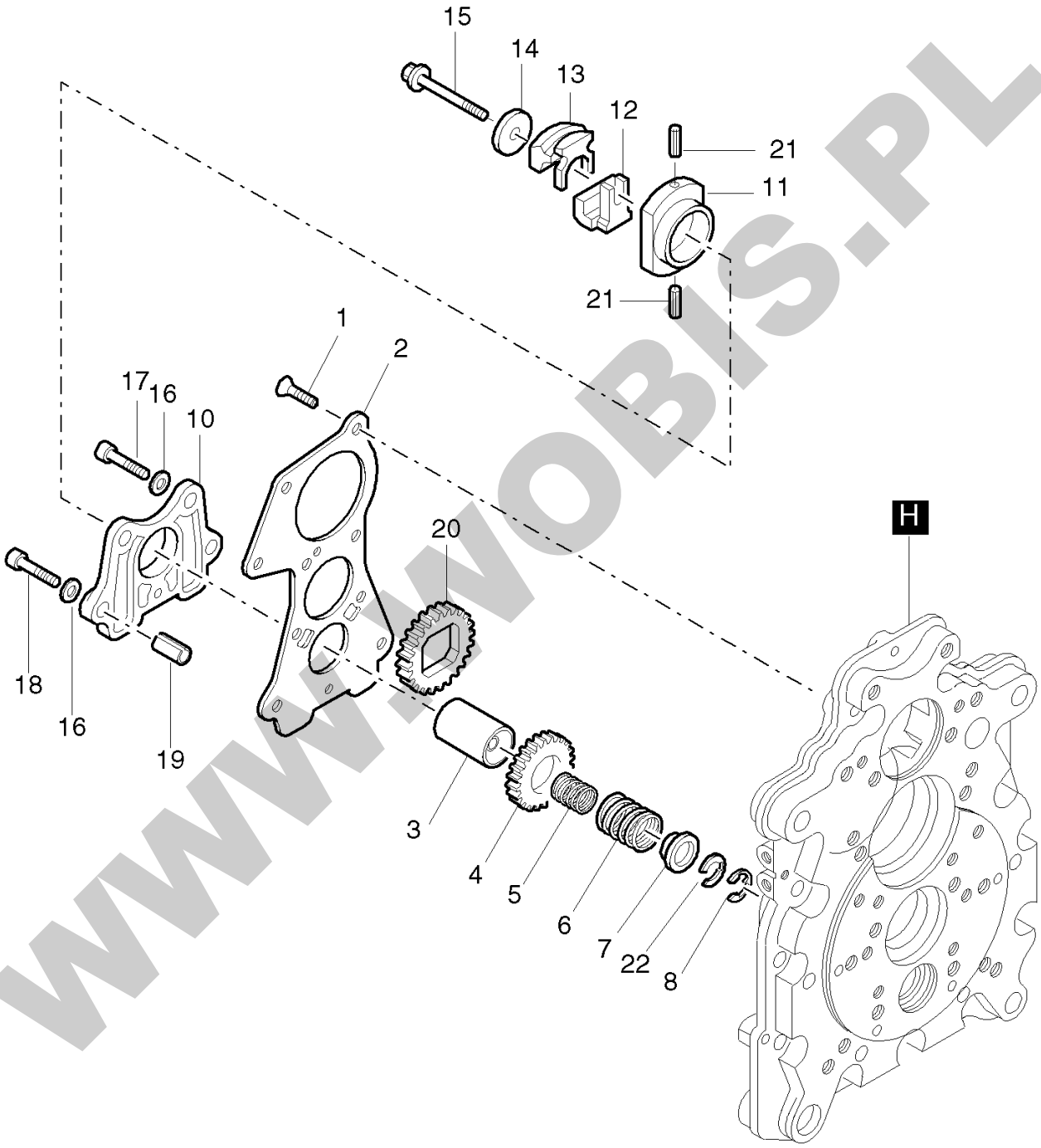

WWW.WOBIS.PL

Pos.	Part no.	Description	Qty.	Parts return	Notice	Add. notice	kg	dDPW	List price
1	000050328000	CTR.SUNK SCR.AM6X16	5		AM 6 x 16 17065 - 8.8 Zn		0,004		2,82
2	000003797412	COVER F. OIL PUMP	1				0,226		116,21
3	000001242401	SPRING CAPSULE+BUSH	1				0,090		194,92
4	000003797310	GEARWHEEL	1				0,056		154,06
5	000004052800	GOVERNOR SPRING 1,6	0... 1		ø 1,6 mm ... 1500 min-1		0,006		12,51
5	000004052900	GOVERNOR SPRING 1,7	0... 1		ø 1,7 mm 1501...1800 min-1		0,006		13,10
5	000004008801	GOVERNOR SPRING 1,9	0... 1		ø 1,9 mm 1801...2300 min-1		0,006		12,06
6	000004070800	GOVERNOR SPRING 2,6	0... 1		ø 2,6 mm 2301...2500 min-1		0,015		20,02
6	000004063400	GOVERNOR SPRING 2,8	0... 1		ø 2,8 mm 2301...3000 min-1		0,016		20,98
6	000004089600	GOVERNOR SPRING 2,8	0... 1		ø 2,8 mm 3000 min-1 Gen.PV78		0,020		56,28
7	000003798600	CUP	1				0,005		13,60
8	000050334700	CIRCLIP 5	1		5 ME DIN 6799		0,001		0,46
10	000003797512	HOUSING FOR OILPUMP	1				0,084		81,90
11	000003797701	PLATE CENTRIF.WEIGH	1				0,085		141,51
12	000003798002	CENTRIFUGAL WEIGHT	1				0,055		98,05
13	000003798102	CENTRIFUGAL WEIGHT	1				0,055		98,05
14	000003797900	WASHER	1				0,008		25,57
15	000003797801	PIN	1				0,016		50,91
16	000050081200	SPRING WASHER A 6	5		A 6 DIN 137 - A3C		0,001		0,46
17	000050170800	ALL.SCR.M 6X 25	3		M 6 x 25 DIN 912 - 8.8 A3C		0,008		1,91
18	000050051000	ALL.SCR.M 6X 30	2		M 6 x 30 DIN 912-8.8		0,009		1,77
19	000050084901	PIN 8 X 12	2		8 x 12 DIN 7346 55 Si 7 2Fasen		0,003		1,46
20	000003798720	GEARWHEEL	1				0,061		142,05
21	000050260501	ROLL PIN 2X10	2		2 x 10 ISO 8752-ST		0,001		1,09

WWW.WOBIS.PL

Pos.	Part no.	Description	Qty.	Parts return	Notice	Add. notice	kg	dDPW	List price
22	000004262500	CIRCLIP 0,3	0... 1		0,3 mm		0,001		2,18
22	000004046000	CIRCLIP 0,5	0... 3		0,5 mm		0,001		2,46
H	000070018944		1				0,400		142,64

WWW.WOBIS.PL

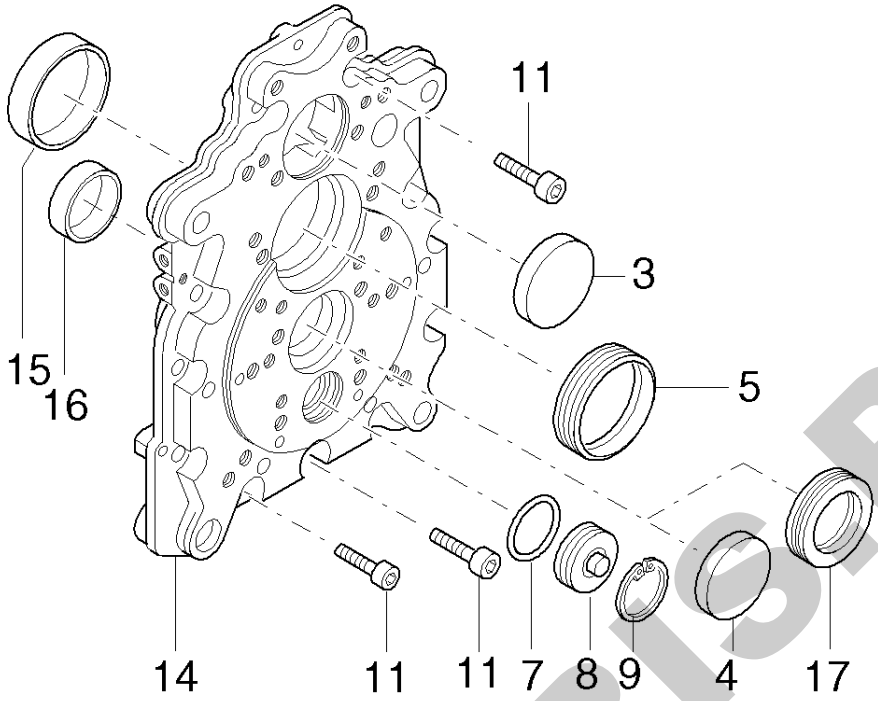

2 (3-5,14-17)

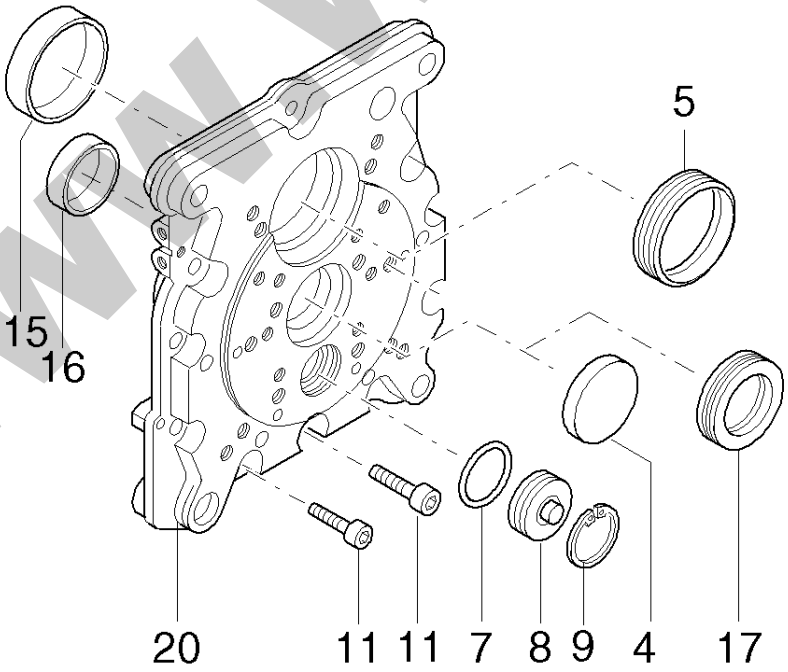

19 (4-5,15-17,20)

WWW.WOBIS.PL

Pos.	Part no.	Description	Qty.	Parts return	Notice	Add. notice	kg	dDPW	List price
2	_nopart	Not in this engine	-						
3	_nopart	Not in this engine	-						
4	000050325700	COVER 52	1		52		0,021		23,52
5	000050325811	OIL SEAL 54X 70X 8	1		54 x 70 x 8		0,026	D1	34,67
7	000050330400	O-RING 27X2N	1		27 x 2		0,001	D1	5,64
8	000004000400	COVER	1				0,005		28,30
9	000050399000	CIRCLIP 32 X 1,2	1		JL 32 x 1,2 DIN 472		0,003		7,92
11	000050417400	ALL.SCREW M 8X30 Z3	12		M 8 x 30 DIN 912-8.8 A3C/6900		0,017		3,46
14	_noorder	No single order	-						
15	000004000310	BEARING BUSH	1				0,036		109,88
16	000004023210	BEARING BUSH	1				0,020		60,70
17	000050364701	OIL SEAL 32X 52X 7	1		32 x 52 x 7		0,018		46,77
19	000001293421	TIMING COVER SAE	1		SAE, HP, FP		2,210		1138,18
20	_noorder	No single order	-						

WWW.WOBIS.PL

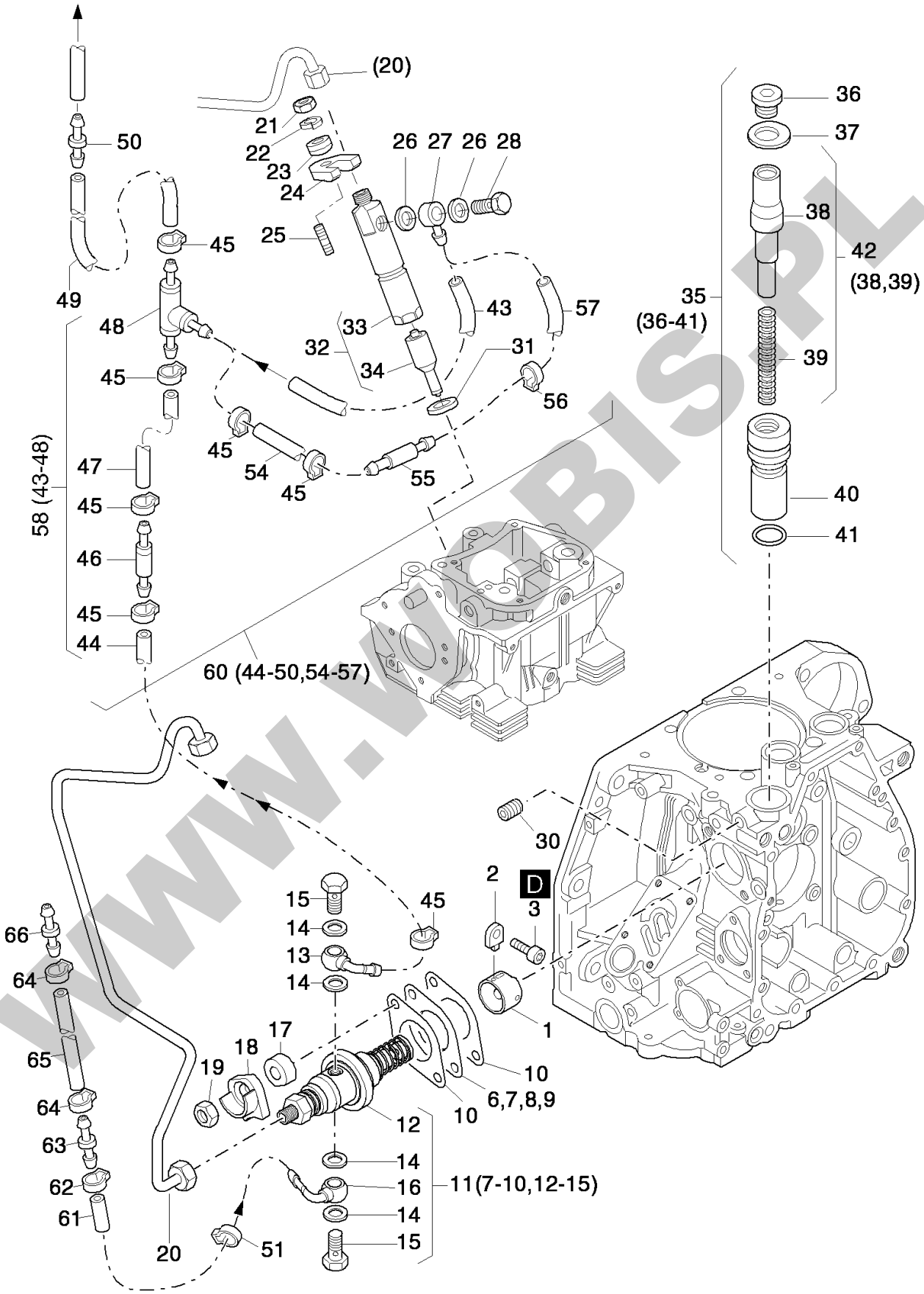
(20)
21
22
23
24
25
26
27
26
28
50
45
49
48
45
47
45
46
45
44
58 (43-48)
33
32
34
31
43
57
56
45
54
45
55
60 (44-50,54-57)
36
37
38
42
(38,39)
35
(36-41)
39
40
41
30
2
D
3
1
15
14
13
14
45
66
64
65
64
63
62
61
20
51
17
18
19
12
10
10
6,7,8,9
14
16
14
15
11(7-10,12-15)

WWW.WOBIS.PL

Pos.	Part no.	Description	Qty.	Parts return	Notice	Add. notice	kg	dDPW	List price
1	000050492900	ROLLER TAPPET	1				0,050		71,03
2	000004169200	GUIDE	1				0,005		25,43
3	000050050600	ALL.SCR.M 6X 12	1		M 6 x 12 DIN 912-8.8		0,005		1,77
6	000003209700	SHIM 0,3	0... 1		0,30 / 42,2		0,003		6,92
7	000004102400	SHIM 0,60/42,2	0... 1		0,60 / 42,2		0,001		4,05
8	000004102500	SHIM 0,90/42,2	0... 1		0,90 / 42,2		0,009		4,64
9	000004102600	SHIM 1,20/42,2	0... 1		1,20 / 42,2		0,013		5,10
10	000004071300	GASKET	0... 2		0,10 mm		0,001	D3	2,91
10	000004102200	GASKT.INJC.PUMP 0,2	0... 2		0,20 mm		0,001		5,51
10	000004102300	GASKT.INJC.PUMP 0,3	0... 2		0,30 mm		0,001		5,92
11	000002259000	INJ. PUMP 1D42 EPA4	1				0,583		
12	_noorder	No single order	-						
13	_nopart	Not in this engine	-						
13	000005299701	BANJO CONNECTION	1				0,011		35,08
14	000050586300	PACKING RING	4				0,001	D4	7,28
15	000050577800	BANJO BOLT M8X1	2		M 8 x 1		0,008		22,57
16	000005299701	BANJO CONNECTION	1				0,011		35,08
17	000004239300	SPACER	2				0,009		9,60
18	000004239100	CLAMP F.IJECT.PUMP	2				0,021		21,84
19	000004244300	HEXAGON NUT M 8/R11	2		M8 / R11		0,006		20,57
20	000001311810	FUEL PRES.PIPE EPA2	1		EPA 2		0,131		77,21
21	000050148000	HEXAGON NUT M 8	1		M 8 DIN 934-8 A3C		0,005		1,46
22	000050208500	SPRING WASHER 8	1		8 DIN 128 A3C		0,001		1,46
23	000004035700	WASHER	1				0,007		6,51

WWW.WOBIS.PL

Pos.	Part no.	Description	Qty.	Parts return	Notice	Add. notice	kg	dDPW	List price
24	000003792401	FLANGE	1				0,054		22,89
25	000050279200	STUD M 8X 40	1		M 8 x 40 DIN 835-8.8 A3C		0,019		4,05
26	000050000800	JOINT A 6,5X 9,5	2		A 6,5 x 9,5 DIN 7603-Cu		0,001	d2	0,46
27	000050333400	BANJO CONNECTION	1				0,005		13,38
28	000050313000	BANJO BOLT M 6	1		M 6		0,005		10,92
30	000050004600	GRUB SCREW M 8X16	1		M 8 x 16 DIN 916-45H A3C		0,003		3,00
31	000004025800	JOINT WASHER	1		2,0 MM		0,002	d1	4,32
32	000050598500	INJECTOR EPA4	1				0,200		
33	_noorder	No single order	-						
34	000050598600	INJCT.NOZZL.D42EPA4	1				0,029		
35	000001498902	PIST.+CYL.EXTR.FUEL	0... 1				0,328		169,21
35	000001505801	PIST.+CYL.EXTR.FUEL	0... 1			""T""	0,320		224,91
36	000050330800	CLOS.SCREW M16X1,5	1		M 16 x 1,5 DIN 908-5.8 A3C Tuf.		0,019		12,79
37	000004001600	DISC	1				0,009		4,55
38	_noorder	No single order	-						
39	000005035200	PRESSURE SPRING	1				0,005		7,28
40	000004001410	CYL.F.EXTR.FUEL DEV	1				0,245		145,92
41	000050328900	O-RING 22X1,6	1		22 x 1,6		0,001		2,46
42	000001519500	PIST.+SPRG.EXT.FUEL	0... 1				0,055		90,45
42	000001512300	PIST.EXT.FUEL 6 MM	0... 1			""T""	0,046		113,98
43	000003962110	FUEL HOSE 3,5X 160	1		3,5 x 160 mm		0,015		9,15
44	000005318000	FUEL PIPE 4,5X 100	1		4,5 x 100 mm	""C""	0,009		5,73
44	000005310200	FUEL PIPE 4,5X 135	1		4,5 x 135 mm		0,013		5,92
45	000050570900	CLAMP 12,8	4... 7		12,8		0,003		8,01

WWW.WOBIS.PL

Pos.	Part no.	Description	Qty.	Parts return	Notice	Add. notice	kg	dDPW	List price
46	000000805502	VENT VALVE	1				0,004		14,01
47	000005310300	FUEL PIPE 4,5X 150	1		4,5 x 150 mm		0,014		6,23
47	000005309900	FUEL PIPE 4,5X 55	1		4,5 x 55 mm	""C""	0,005		2,91
48	000005242400	HOSE NIPPLE T NW 3	1		NW 3	""C""	0,002		7,74
48	000003989601	HOSE NIPPLE T	1				0,002		6,51
49	000004089710	FUEL HOSE 5,0 X 510	1		5 x 510 mm	""C""	0,052		23,61
50	000050279600	CONNECTING NIPPLE	1			""C""	0,006		19,47
51	000050590000	CLAMP 12,0	1		12,0		0,002		8,92
54	000005318100	FUEL HOSE 5,0 X 60	1		5 x 60 mm	""C""	0,006		3,87
55	000005301200	NIPPLE	1			""C""	0,002		13,10
56	000050399801	CLAMP 11,3	1		11,3	""C""	0,002		7,60
57	000005318200	FUEL PIPE 3,5X 205	1		3,5 x 205 mm	""C""	0,019		7,23
58	000001457410	FUEL PIPE	1		EPA2	""S-Z""	0,054		55,74
60	000001476910	FUEL PIPE	1		EPA2	""C""	0,127		139,37
61	000003664310	FUEL HOSE 5,0 X 75	1		5 x 75	""C""	0,008		5,23
62	000050570900	CLAMP 12,8	1		12,8	""C""	0,003		8,01
63	000005240400	NIPPLE	1			""C""	0,048		10,28
64	000050523800	CLAMP 16,0	2		16,0	""C""	0,004		9,92
65	000003493610	FUEL HOSE 7 X 330	1		7 x 330 mm	""C""	0,046		17,52
66	000003658101	CONNECTING NIPPLE	1			""C""	0,045		29,53
D	000050223300	LOCTITE 221	1		50 ML		0,077		102,74

WWW.WOBIS.PL

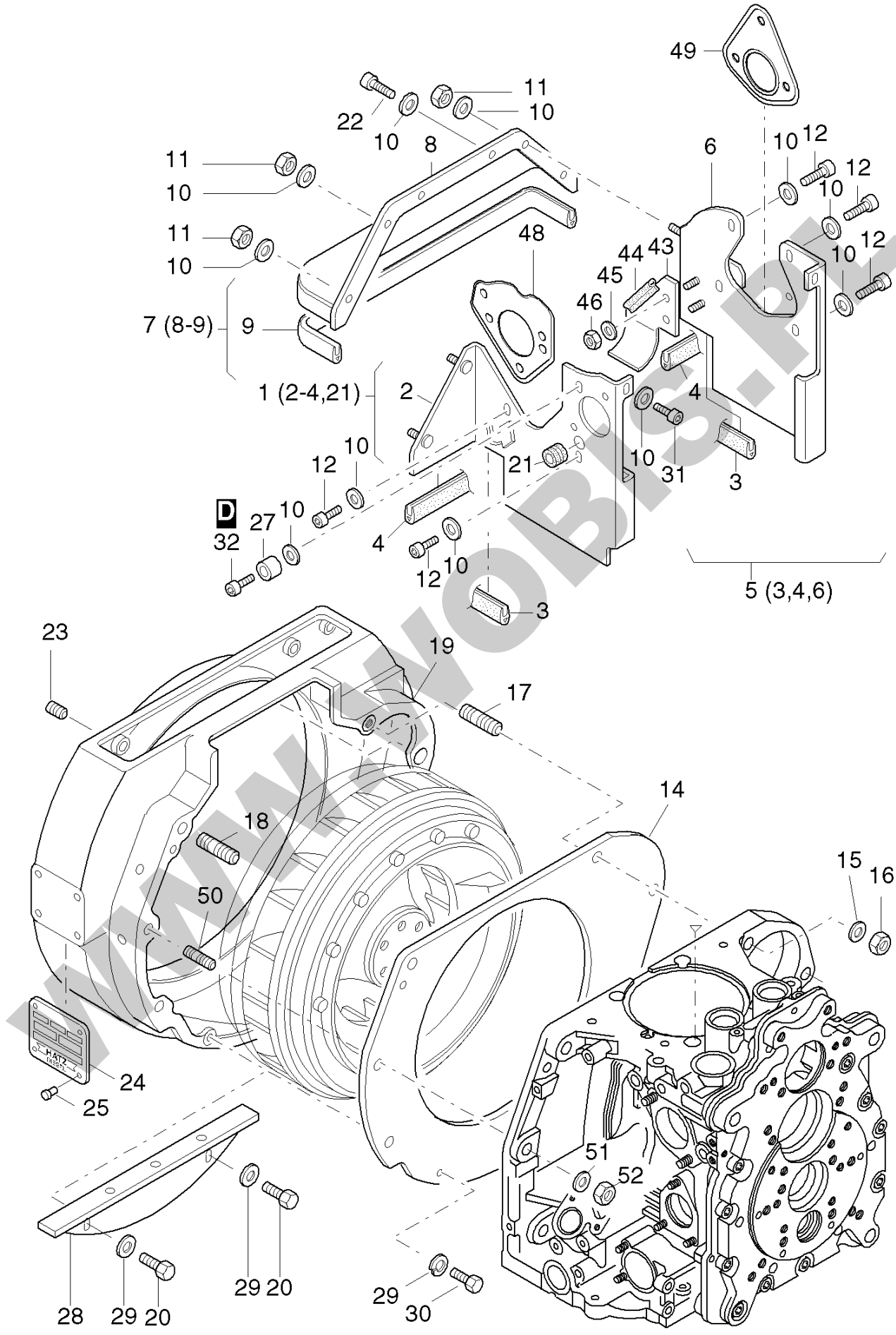
49
11
10
22
10
8
11
10
11
10
7 (8-9)
9
6
10
12
12
10
12
10
48
44
43
45
46
1 (2-4,21)
2
4
12
10
21
10
31
3
D
27
10
32
4
12
10
5 (3,4,6)
3
23
19
17
14
18
50
15
16
24
25
51
52
28
29
20
29
20
29
30

WWW.WOBIS.PL

Pos.	Part no.	Description	Qty.	Parts return	Notice	Add. notice	kg	dDPW	List price
1	000001260920	COOLING AIR DUCT	1				0,259		83,72
2	_noorder	No single order	-						
3	000004146300	SEALING STRIP 29MM	2		29 mm		0,003		4,00
4	000004146400	SEALING STRIP 41 MM	2		41 mm		0,004		4,50
5	000001261010	COOLING AIR DUCT	1				0,277		76,17
6	_noorder	No single order	-						
7	000001261101	COOLING AIR DUCT	1				0,269		109,88
8	_noorder	No single order	-						
9	000004146500	SEALING STRIP 304MM	1		304 mm		0,028		16,65
10	000050390701	CON.SPR.WASHER 6	15		6 DIN 6796 - 6 - FST ZN		0,001		1,09
11	000050144400	HEXAGON NUT M 6	4		M 6 DIN 934 - 8 A3C		0,002		1,27
12	000050384200	ALL.SCR.M 6X 12	6		M 6x12 DIN 912-8.8 A3C Tuf. 360 G		0,005		3,32
14	000004031100	PARTING SHEET	1				0,378		83,49
15	000050093700	FLAT WASHER A 13	2		13 DIN 125-St A3C		0,006		1,77
16	000050093600	HEXAGON NUT M 12	2		M12 DIN 934-8 A3C		0,017		2,82
17	000050475000	STUD M12FO X40	2		M 12 x 40 DIN 835-8.8 A3C		0,046		8,78
18	000050040900	STUD M10X 35	3		M 10 x 35 DIN 835 - 8.8		0,029		4,37
19	000001688900	INTERM.HOUS.1D30/41	1		SAE 6 1D30-1D41 ALU.		2,815		878,15
20	_nopart	Not in this engine	-						
21	000050334800	RUBBER SLEEVE	1				0,001		3,32
22	000050416800	ALL.SCR. M 6X 16	2		M 6 x 16 DIN 912 - 8.8 A3C Tuf.		0,005		1,46
23	000050226000	GRUB SCREW M 8X6	2		M 8 x 6 DIN 913-45H TU.FLEC		0,002		4,14
24	_nopart	Not in this engine	-						
25	000040002500	RIVET 2,4 X 6	4		2,4		0,001		1,46

WWW.WOBIS.PL

Pos.	Part no.	Description	Qty.	Parts return	Notice	Add. notice	kg	dDPW	List price
27	000003936400	BUSH 6,2X8X5,5	1		6,2 x 8 x 5,5		0,001		4,96
28	_nopart	Not in this engine	-						
29	000050170900	SPRING WASHER 6	2		6 DIN 128 - A3C		0,001		0,46
30	000050177100	HEXSCREW M 6X 16	2		M 6 x 16 DIN 933-8.8 A3C		0,005		1,46
31	000050416800	ALL.SCR. M 6X 16	2		M 6 x 16 DIN 912 - 8.8 A3C Tuf.		0,005		1,46
32	000050474200	ALL.SCR. M 6X 16	1		M6x16 DIN912-8.8 A3C Tuf.360		0,006		4,50
43	000001309800	COOLING AIR DUCT.	1				0,070		26,89
44	000004085500	SEALING STRIP 60 MM	1		60 mm		0,999		13,15
45	000050120000	DISC A 6,4	2		A 6,4 DIN 9021-St A3C		0,003		0,46
46	000050328300	HEXAGON NUT VM6	2		VM 6 DIN 980-8 A3C		0,002		1,46
48	000004212500	SEALING PLATE	1				0,017		9,92
49	000004212601	SEALING PLATE	1				0,011		7,74
50	000050041200	STUD M10X 45	1		M 10 x 45 DIN 835 - 8.8		0,035		4,87
51	000050145900	FLAT WASHER 10,5	4		10,5 DIN 125-St A3C		0,004		1,46
52	000050145800	HEXAGON NUT M 10	4		M 10 DIN 934-8 A3C		0,011		2,05
D	000050223300	LOCTITE 221	1		50 ML		0,077		102,74

WWW.WOBIS.PL

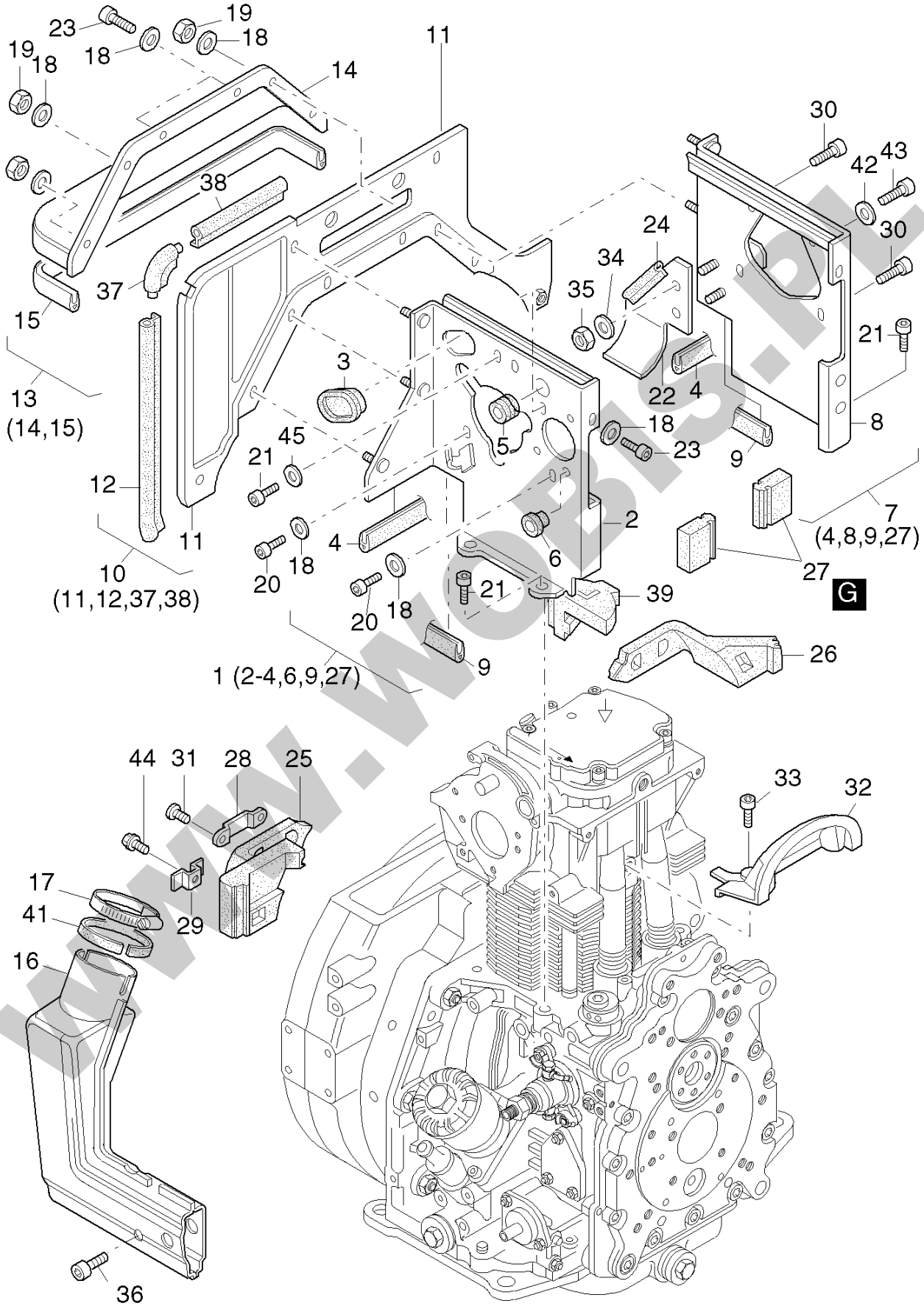
23
19
18
19
18
18
14
11
30
42
43
30
38
24
34
35
37
15
21
3
22
4
13
(14,15)
5
18
23
8
9
45
21
12
7
(4,8,9,27)
2
11
4
6
27
10
(11,12,37,38)
20
18
21
39
G
20
18
9
26
1 (2-4,6,9,27)
44
31
28
25
33
32
17
41
29
16
36

WWW.WOBIS.PL

CD-ID: 003M2

Pos.	Part no.	Description	Qty.	Parts return	Notice	Add. notice	kg	dDPW	List price
1	000001290810	COOLING AIR DUCT.	1				0,356		220,27
2	_noorder	No single order	-						
3	000004078600	RUBBER SLEEVE	1				0,003		7,92
4	000004030801	SEALING STRIP 41MM	2		41 mm		0,003		4,37
5	_nopart	Not in this engine	-						
6	000050334800	RUBBER SLEEVE	1				0,001		3,32
7	000001290710	COOLING AIR DUCT.	1				0,388		200,52
8	_noorder	No single order	-						
9	000004030901	SEALING STRIP 29MM	2		29 mm		0,002		4,60
10	000001290600	INTERMEDIATE WALL	1				0,372		210,71
11	_noorder	No single order	-						
12	000004066900	SEALG.STRIP 230MM	1		228 mm		0,018		21,20
13	000001290401	COOLING AIR DUCT	1				0,239		191,78
14	_noorder	No single order	-						
15	000004146500	SEALING STRIP 304MM	1		304 mm		0,028		16,65
16	000001307600	AIR INTAKE ELBOW	1				0,312		197,97
17	000040071500	HOSE CLIP 32-50	1		32 - 50		0,025		9,28
18	000050390701	CON.SPR.WASHER 6	13		6 DIN 6796 - 6 - FST ZN		0,001		1,09
19	000050144400	HEXAGON NUT M 6	4		M 6 DIN 934 - 8 A3C		0,002		1,27
20	000050384200	ALL.SCR.M 6X 12	2		M 6x12 DIN 912-8.8 A3C Tuf. 360 G		0,005		3,32
21	000050416800	ALL.SCR. M 6X 16	4		M 6 x 16 DIN 912 - 8.8 A3C Tuf.		0,005		1,46
22	000001309800	COOLING AIR DUCT.	1				0,070		26,89
23	000050416800	ALL.SCR. M 6X 16	4		M 6 x 16 DIN 912 - 8.8 A3C Tuf.		0,005		1,46
24	000004085500	SEALING STRIP 60 MM	1		60 mm		0,999		13,15

WWW.WOBIS.PL

Pos.	Part no.	Description	Qty.	Parts return	Notice	Add. notice	kg	dDPW	List price
25	000004075500	FILLING PIECE	1				0,098		161,21
26	000004075400	FILLING PIECE	1				0,081		157,48
27	_nopart	Not in this engine	-						
28	_nopart	Not in this engine	-						
29	000004075600	SUPPORT	4				0,003		3,50
30	000050149100	ALLEN SCREW M 6X 12	3		M 6 x 12 DIN 912-8.8 A3C		0,005		1,14
31	_nopart	Not in this engine	-						
32	_nopart	Not in this engine	-						
33	_nopart	Not in this engine	-						
34	000050120000	DISC A 6,4	2		A 6,4 DIN 9021-St A3C		0,003		0,46
35	000050328300	HEXAGON NUT VM6	2		VM 6 DIN 980-8 A3C		0,002		1,46
36	000050170600	ALL.SCR.M 6X 20	1		M 6 x 20 DIN 912-8.8 A3C		0,007		1,77
37	000004066400	GASK.F.INTERME.WALL	1				0,003		15,83
38	000004074900	SEALG.STRIP 100MM	1		100 mm		0,999		11,51
39	000004079600	FILLING PIECE	1				0,034		39,54
41	000004089100	SEALG.STRIP13X1X148	1		13 x 1 x 148		0,001		6,10
42	000050170900	SPRING WASHER 6	1		6 DIN 128 - A3C		0,001		0,46
43	000050384200	ALL.SCR.M 6X 12	1		M 6x12 DIN 912-8.8 A3C Tuf. 360 G		0,005		3,32
44	000050289200	HEXSCREW M 6X 14	4		M 6 x 12 KZ 1-8.8 A3D		0,005		1,91
45	_nopart	Not in this engine	-						
G	000050256501	LOCTITE IS 407	1				0,033		54,10

WWW.WOBIS.PL

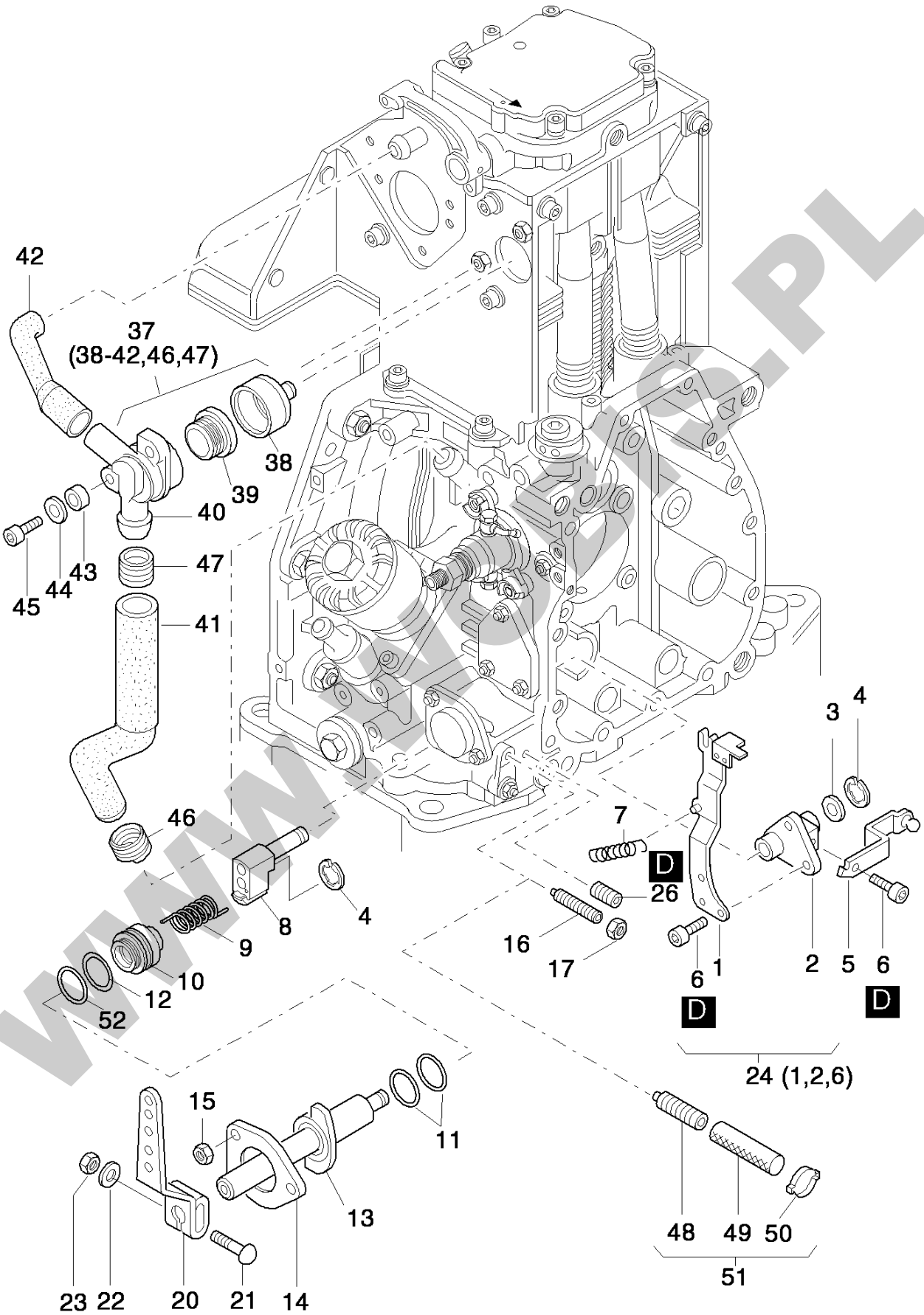
42
37
(38-42,46,47)
38
39
40
45
44
43
47
41
46
8
4
9
10
12
52
7
D
26
16
17
6
1
D
3
4
2
5
6
D
24 (1,2,6)
15
11
13
23
22
20
21
14
48
49
50
51

WWW.WOBIS.PL

Pos.	Part no.	Description	Qty.	Parts return	Notice	Add. notice	kg	dDPW	List price
1	_noorder	No single order	-						
2	_noorder	No single order	-						
3	000004000100	SHIM	1				0,001		3,09
4	000050266100	CIRCLIP 6	2		6 DIN 6799		0,001		0,46
5	000004037500	LEVER	1				0,025		16,70
6	000050328701	ALL.SCR. M5X8	4		M 5 x 8 DIN 912-8.8 Tuf.		0,003		1,68
7	000004000200	TENSION SPRING	1				0,001		10,24
8	000001242811	GUIDE	1				0,063		102,06
9	000003799010	THIGH SPRING	1				0,012		10,42
10	000004052710	SPACER RING	1				0,155		41,31
11	000050412900	O-RING 18 X 2	2		18 x 2		0,001	D2	1,91
12	000050129900	O-RING 32X37X2,5	1		32 x 2,5		0,001	D1	5,64
13	000001279222	STOP RNG.SPD.CONT.S	1				0,210		
13	000001302922	STOP RNG.SPD.CONT.C	1			""C""	0,226		
14	000003799210	FRICTION PLATE	1				0,017		15,83
15	000050328300	HEXAGON NUT VM6	3		VM 6 DIN 980-8 A3C		0,002		1,46
16	000050507800	GRUB SCREW M6X45	2		M 6 x 45		0,007		7,46
17	000050144400	HEXAGON NUT M 6	2		M 6 DIN 934 - 8 A3C		0,002		1,27
20	000003888300	HANDLEVER	1				0,100		29,80
21	000003927301	SCREW M 6X 32	1		M 6 x 32		0,012		4,55
22	000050144500	FLAT WASHER 6,4	1		6,4 DIN 125-St A3C		0,001		0,46
23	000050346500	HEXAGON NUT M6	1		M 6 DIN 934 - 10 A2F 8 10.9		0,002		1,27
24	000001246803	GOVERNOR LEVER	1				0,110		224,36
26	000050403500	GRUB SCREW M8X20	1		M 8 x 20 DIN 914-45H		0,006		5,01

WWW.WOBIS.PL

Pos.	Part no.	Description	Qty.	Parts return	Notice	Add. notice	kg	dDPW	List price
37	000001308101	BREATHER VALVE	1				0,078		97,28
38	000004080300	BREATHER CUP	1				0,004		7,28
39	000003568700	DIAPHRAGM	1		part was replaced by 000003568701		0,004		
40	_noorder	No single order	-						
41	000004083800	BREATHER HOSE	1		FORM 1894		0,040		25,80
42	000004074800	BREATHER HOSE	1		FORM 1695		0,012		14,01
43	000004080500	BUSH	2		7 x 8 x 8 part was replaced by 000004080501		0,001		6,96
44	000050081200	SPRING WASHER A 6	2		A 6 DIN 137 - A3C		0,001		0,46
45	000050170700	ALL.SCR.M 6 X 16	2		M 6 x 16 DIN 912-8.8 A3C		0,006		1,77
46	000004090500	CLAMP 18MM	1				0,001		2,05
47	000004122300	CLAMP	1				0,001		2,05
48	000050405301	GRUB SCREW M6 X 45	1		M 6 x 45 DIN 915 Tuf.	""C""	0,005		6,14
49	000005037900	HOSE 7 X 12 X 90	1		7 x 12 x 90	""C""	0,007		5,96
50	000050388300	CLAMP 11-13	1		11 - 13	""C""	0,003		8,37
51	000001474000	ADJUST.SCREW1D20-40	1			""C""	0,015		21,75
52	000050453600	SUPPORTING DISC SS	1		32 x 45 x 2,5 A3C DIN 988		0,015		7,83
D	000050223300	LOCTITE 221	1		50 ML		0,077		102,74

WWW.WOBIS.PL

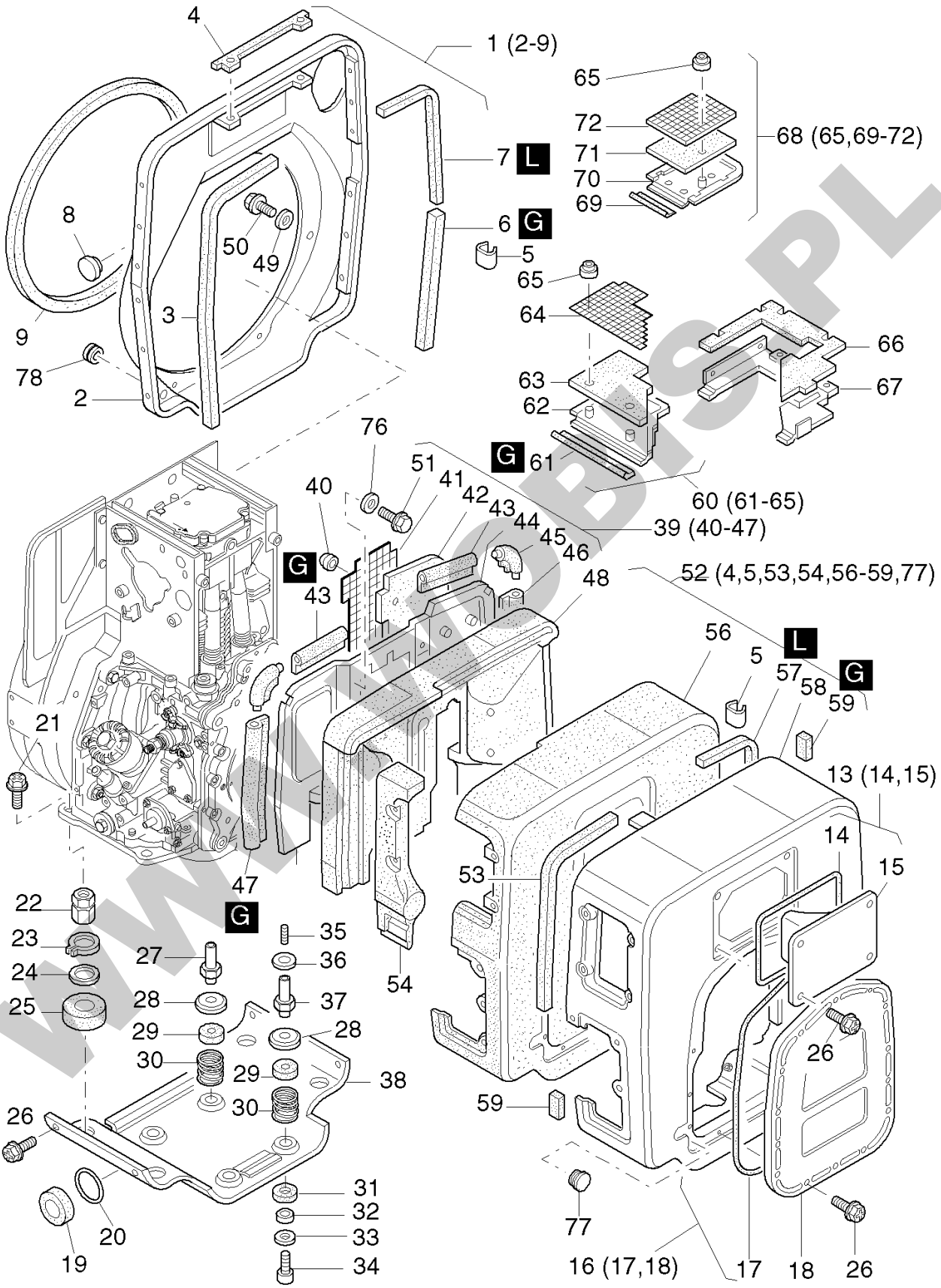
4
1 (2-9)
65
72
71
70
69
68 (65,69-72)
7 L
6 G
5
8
50
49
3
9
78
2
65
64
63
62
66
67
G 61
60 (61-65)
76
51
41
42
43
44
45
46
40
39 (40-47)
G
43
48
52 (4,5,53,54,56-59,77)
56
5
L
57
58
G
59
21
13 (14,15)
14
15
53
47
G
54
22
23
24
25
27
35
36
37
28
29
30
28
29
30
38
26
59
26
31
32
33
34
20
19
77
16 (17,18)
17
18
26

WWW.WOBIS.PL

Pos.	Part no.	Description	Qty.	Parts return	Notice	Add. notice	kg	dDPW	List price
1	000001289100	END PLATE	1				2,294		861,18
2	_noorder	No single order	-						
3	000004080600	SEALG.STRIP 8X8X530	1		8 x 8 x 530 mm Silikon		0,021		19,75
4	000004073800	GASKET	2				0,006		49,00
5	000004084100	CATCH	8				0,003		5,41
6	_nopart	Not in this engine	-						
7	000004081000	SEALG.STRIP 8X8X530	1		8 x 8 x 530 mm		0,021		12,56
8	000050395500	COVER 17,6	1		PHT 17, 6/20		0,001		7,60
9	000004049500	SEALING STRIP	1		1230 mm		0,130		79,72
13	000001289500	COVER SMALL	1				0,163		156,93
14	000004049100	SEALING STRIP	1				0,003		12,24
15	_noorder	No single order	-						
16	000001289401	COVER BIG	1				0,620		176,54
16	000001474401	COVER BIG	1		Handstart, demarr. man.		0,615		203,89
17	000004080900	SEALING STRIP	1		3,0 x 1045		0,006		14,56
18	_noorder	No single order	-						
19	000003755300	GASKET	1		46/16		0,004		7,83
20	000003592301	WASHER 26,1X38X1	1		26,1 x 38 x 1		0,005		7,83
21	000050386600	HEXSCREW M10X 20	4		M 10 x 20 A3C W 158.12 - 10.9		0,025		6,87
22	000003993700	NUT M10 X 27,5	4		M 10 x 27,5		0,075		17,93
23	000050020400	CIRCLIP 24X1,2	4		A 24 x 1,2 DIN 471		0,002		2,05
24	000003592301	WASHER 26,1X38X1	4		26,1 x 38 x 1		0,005		7,83
25	000003755300	GASKET	4		46/16		0,004		7,83
26	000050289200	HEXSCREW M 6X 14	24		M 6 x 12 KZ 1-8.8 A3D		0,005		1,91

WWW.WOBIS.PL

Pos.	Part no.	Description	Qty.	Parts return	Notice	Add. notice	kg	dDPW	List price
27	000004077400	SPACER	2				0,022		37,99
28	000004042100	CUP	4				0,011		7,05
29	000004041900	SEALING RING	4				0,002		9,74
30	000004042200	PRESSURE SPRING	4				0,015		9,74
31	000004041800	RUBBER SEAL RING	4				0,004		8,46
32	000004041700	BUSH 7X12X11	4		7 x 12 x 11		0,003		8,05
33	000004042000	WASHER 6,5X22,5X1	4		6,5 x 22,5 x 1		0,003		3,00
34	000050170600	ALL.SCR.M 6X 20	4		M 6 x 20 DIN 912-8.8 A3C		0,007		1,77
35	000050139200	STUD M 6X 16	2		M 6 x 16 DIN 939-8.8		0,002		1,46
36	000050144500	FLAT WASHER 6,4	4		6,4 DIN 125-St A3C		0,001		0,46
37	000004077400	SPACER	2				0,022		37,99
38	000001303700	BASE PAN	1				1,323		222,90
39	000001306300	INTERMEDIATE WALL	1				0,722		501,09
40	000050388500	HOLDING DISC 4,5	4		4,5		0,002		1,55
41	000004078100	GRID	1				0,057		21,02
42	000004078000	INSULATING BORD	1				0,048		90,59
43	000004074900	SEALG.STRIP 100MM	2		100 mm		0,999		11,51
44	_noorder	No single order	-						
45	000004066400	GASK.F.INTERME.WALL	2				0,003		15,83
46	000004075000	SEALG.STRIP 186MM	1		180 mm		0,019		18,11
47	000004066900	SEALG.STRIP 230MM	1		228 mm		0,018		21,20
48	000001306500	LINING	1				0,322		347,48
49	000050144500	FLAT WASHER 6,4	6		6,4 DIN 125-St A3C		0,001		0,46
50	000050274800	HEXSCREW M 6X6	6		M 6 x 6 DIN 933-8.8 A3C		0,003		3,09

WWW.WOBIS.PL

Pos.	Part no.	Description	Qty.	Parts return	Notice	Add. notice	kg	dDPW	List price
51	000050335600	COMBI SCREW M 6X 16	2		M 6 x 16 KZ 1-8.8 A3D		0,005		3,09
52	000001289300	BLOWER DUCTING	1				4,856		1832,15
53	000004081600	SEALG.STRIP 8X8X330	1		8 x 8 x 360 mm		0,014		8,78
54	_nopart	Not in this engine	-						
56	000001305300	LINING	1				1,048		504,19
57	000004080700	SEALG.STRIP 8X8X330	1		8 x 8 x 360		0,014		13,60
58	_noorder	No single order	-						
59	000004081700	SEALING STRIP8X8X25	2		8 x 8 x 25 mm		0,999		1,32
60	_nopart	Not in this engine	-						
61	_nopart	Not in this engine	-						
62	_noorder	No single order	-						
63	_noorder	No single order	-						
64	_noorder	No single order	-						
65	_noorder	No single order	-						
66	_nopart	Not in this engine	-						
67	_nopart	Not in this engine	-						
68	000001289200	PARITITION WALL " PARITITION WALL ""	1				0,695		
69	000004083200	SEALING STRIP 97MM	1		97 mm		0,009		11,51
70	_noorder	No single order	-						
71	000004082800	INSULATION PLATE	1				0,025		93,73
72	000004082700	PERFORATED PLATE	1				0,033		24,16
76	_nopart	Not in this engine	-						
77	000050160800	CLOSING PLUG 10MM	1		F 5 14x10,7x7,5 SCHW.		0,001		2,46
78	000003565400	RUBBER SLEEVE	2				0,003		6,10

WWW.WOBIS.PL

Pos.	Part no.	Description	Qty.	Parts return	Notice	Add. notice	kg	dDPW	List price
G	000050256501	LOCTITE IS 407	1	●			0,033		54,10
L	000050256600	SILICON SEALER	1	●			0,130		200,56

WWW.WOBIS.PL

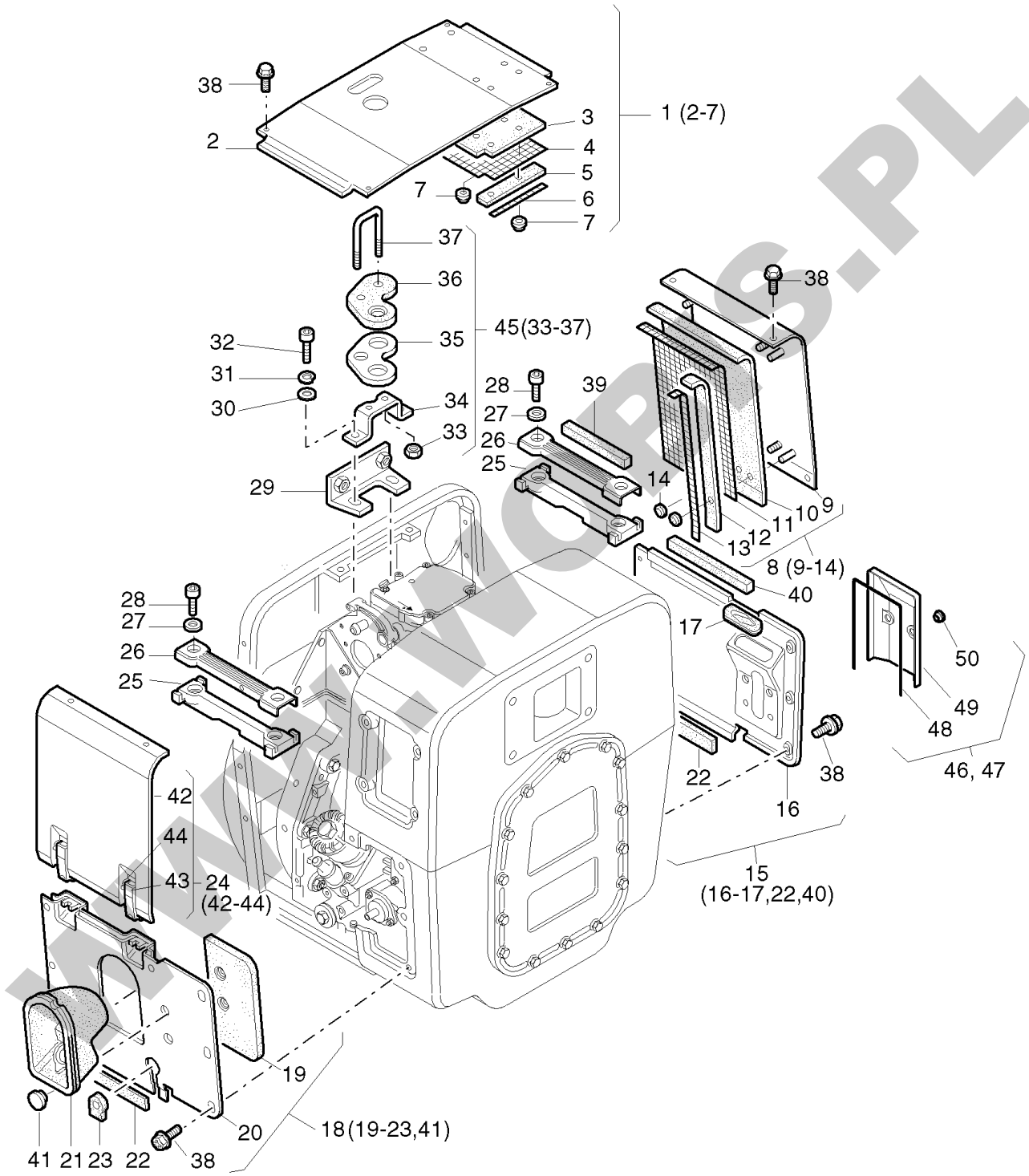
38
2
3
4
5
7
6
7
1 (2-7)
37
36
35
45(33-37)
32
31
30
34
33
28
27
26
25
39
29
38
14
9
10
11
12
13
8 (9-14)
40
28
27
26
25
17
50
49
48
46, 47
38
22
16
15
(16-17,22,40)
42
44
43
24
(42-44)
19
20
18(19-23,41)
41
21
23
22
38

WWW.WOBIS.PL

Pos.	Part no.	Description	Qty.	Parts return	Notice	Add. notice	kg	dDPW	List price
1	000001305500	HOOD	1				1,115		348,58
2	_noorder	No single order	-						
3	000004076000	INSULATION BORD	1				0,040		88,73
4	000004076300	FASTENING PLATE	1				0,042		
5	000004076100	INSULATION BORD	1				0,004		75,35
6	000004076200	FIXING RAIL	1				0,050		15,83
7	000050388500	HOLDING DISC 4,5	6		4,5		0,002		1,55
8	000001305800	COWLING	1				0,739		353,85
9	_noorder	No single order	-						
10	000004076600	INSULATION PLATE	1				0,066		102,88
11	000004076800	FASTENING PLATE	1				0,070		33,22
12	000004076700	INSULATION PLATE	1				0,009		87,41
13	000004076900	FIXING RAIL	1				0,007		15,83
14	000050388500	HOLDING DISC 4,5	6		4,5		0,002		1,55
15	000001290000	COWLING	1				0,935		309,90
16	_noorder	No single order	-						
17	000003993100	RUBBER SLEEVE	1				0,014		9,96
18	000001289800	COWLING	1				0,864		485,67
19	000004087600	INSULATION BORD	1				0,032		93,41
20	_noorder	No single order	-						
21	000004076500	RUBBER INSERT	1				0,083		156,20
22	000004086500	SEALING STIP 182L	1		13 x 1 x 182 mm		0,004		7,92
23	000004084700	SEALG.PLATE	1				0,008		10,78
24	000001289700	SIDE PANAL	1				0,670		352,67

WWW.WOBIS.PL

Pos.	Part no.	Description	Qty.	Parts return	Notice	Add. notice	kg	dDPW	List price
24	000002015900	COWLING	1		Dekompr.-Automatik		0,661		420,74
25	000004077300	RUBBER STRIP	2				0,066		
26	000001306100	STIFFNER	2				0,093		185,28
27	000050081200	SPRING WASHER A 6	4		A 6 DIN 137 - A3C		0,001		0,46
28	000050133000	ALL.SCR.M 6X 12	4		M 6 x 12 DIN 6912-8.8		0,004		2,82
29	000001307800	SUPPORT	1				0,023		60,11
30	000050148100	FLAT WASHER 8,4	2		8,4 DIN 125-St A3C		0,002		0,46
31	000050347301	SPRING WASHER 8	2		VHZ 8 A3C		0,001		0,46
32	000050175900	ALL.SCR.M 8X 30	2		M 8 x 30 DIN 912-8.8 A3C		0,017		2,82
33	000050328300	HEXAGON NUT VM6	2		VM 6 DIN 980-8 A3C		0,002		1,46
34	000004061210	LIFTING BRACKET	1				0,065		97,42
35	_noorder	No single order	-						
36	000004061100	SEALING PLATE	1				0,002		16,88
37	_noorder	No single order	-						
38	000050289200	HEXSCREW M 6X 14	26		M 6 x 12 KZ 1-8.8 A3D		0,005		1,91
39	000004077200	SEALG.STRIP10X8X122	1		8 x 8 x 122 mm		0,003		6,96
40	000004080000	SEALG.STRIP10X8X160	1		8 x 8 x 160 mm		0,004		9,01
41	000050395500	COVER 17,6	2		PHT 17, 6/20		0,001		7,60
42	_noorder	No single order	-						
43	000050393200	FASTENER	2				0,029		49,73
44	000050396100	RIVET 2,5X 8	4		2,5 x 8 DIN 660-St part was replaced by 000050396101		0,999		
45	000001290501	LIFT.DEVICE 30/40C	1				0,130		215,22
46	000001583100	COVERING CAP	0... 1		(ohne,without,sans Powerbox)		0,070		125,13
47	000001753100	COVERING CAP	0... 1		(mit,with,avec Powerbox)		0,066		177,40

WWW.WOBIS.PL

Pos.	Part no.	Description	Qty.	Parts return	Notice	Add. notice	kg	dDPW	List price
48	000005036200	SEALING STRIP 409MM	1		409mm		0,035		31,17
49	_noorder	No single order	-						
50	000003665200	RUBBER SLEEVE	2				0,002		5,60

WWW.WOBIS.PL

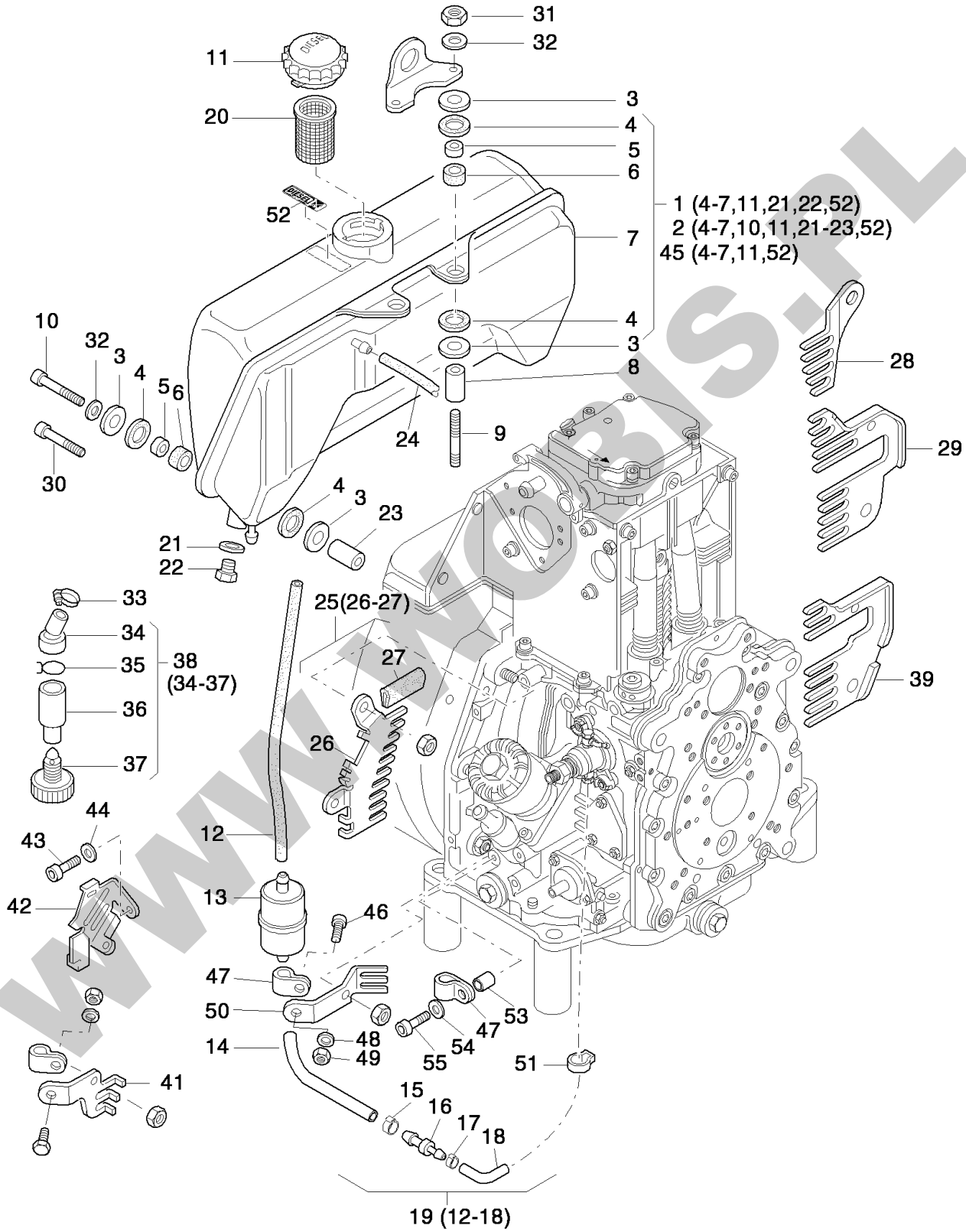
31
32
11
20
3
4
5
6
52
1 (4-7,11,21,22,52)
2 (4-7,10,11,21-23,52)
45 (4-7,11,52)
7
4
3
8
10
32
3
4
5
6
30
24
9
28
29
4
3
23
21
22
33
34
35
38
(34-37)
36
37
25(26-27)
27
26
39
44
43
12
42
13
46
47
50
53
47
54
55
48
49
14
51
41
15
16
17
18
19 (12-18)

WWW.WOBIS.PL

Pos.	Part no.	Description	Qty.	Parts return	Notice	Add. notice	kg	dDPW	List price
1	000001535000	FUEL TANK 5 LTRS	1		5 l		2,908		685,28
2	_nopart	Not in this engine	-						
3	000005097600	WASHER	8		8,5 - 27		,000		3,00
4	000003981802	RUBBER WASHER	8		17 - 25		0,001		9,01
5	000003981701	BUSH 8,4X13X7,5	4		8,4 x 13 x 7,5		0,005		5,23
6	000003981900	RUBBER SHELL	4				0,001		1,96
7	_noorder	No single order	-						
8	000003981500	BUSH 9X18X49	2		9 x 18 x 49		0,073		21,43
9	000050377001	STUD M 8X 75	0... 2		M 8 x 75 DIN 835-10.9 A3C		0,033		9,28
9	000050065100	STUD M 8X85	0... 2		M 8 x 85 DIN 835-8.8 A3C		0,035		6,14
10	000050171600	ALL.SCR.M 8X 65	2		M 8 x 65 DIN 912-8.8 A3C		0,030		5,78
11	000040032701	CAP F.FUEL TANK B40	1		B 40		0,071		26,98
12	000005330200	FUEL HOSE 7 X 125	1		7 x 125		0,018		8,87
13	000050478800	FUEL FILTER 7MY	1		Filter		0,054	W2	30,89
14	000005330100	FUEL HOSE 7 X 180	1		7 x 180		0,026		11,83
15	000050523800	CLAMP 16,0	1		16,0		0,004		9,92
16	000005240400	NIPPLE	1				0,048		10,28
17	000050570900	CLAMP 12,8	1		12,8		0,003		8,01
18	000003664310	FUEL HOSE 5,0 X 75	1		5 x 75		0,008		5,23
19	000001473710	FUEL FILTER W.PIPES	1				0,125		113,43
20	000040037800	SIEVE	1		f. Tank 5l B 40		0,015		41,77
21	000050001000	JOINT A10 X16	1		A 10 x 16 DIN 7603-Cu		0,008		0,59
22	000005126000	DRAIN PLUG	1		M 10 x 12		0,018		28,67
23	000003981600	BUSH 9X18X38	2		9 x 18 x 38		0,057		13,38

WWW.WOBIS.PL

Pos.	Part no.	Description	Qty.	Parts return	Notice	Add. notice	kg	dDPW	List price
24	000003663810	FUEL HOSE 5,0 X 40	1		5 x 40 mm		0,002		2,50
25	_nopart	Not in this engine	-						
26	_nopart	Not in this engine	-						
27	_nopart	Not in this engine	-						
28	_nopart	Not in this engine	-						
29	_nopart	Not in this engine	-						
30	_nopart	Not in this engine	-						
31	000050148000	HEXAGON NUT M 8	2		M 8 DIN 934-8 A3C		0,005		1,46
32	000050208500	SPRING WASHER 8	4		8 DIN 128 A3C		0,001		1,46
33	000050448000	CLAMP	1				0,008		9,37
34	000005044001	HOSE 20/12 MM	1				0,003		17,65
35	000005036900	HOSE CLIP	1				0,003		7,74
36	000005043901	WATER SEPARATOR	1				0,012		19,88
37	000050414800	CLOS. SCREW M 10	1		M 10		0,007		12,29
38	000001519402	WATER SEPARATOR	1				0,025		63,84
39	000001529000	PROT.GUARD D30...41	1				0,070		29,62
41	000005036600	GUARD BELOW	1				0,043		17,88
42	000005036701	GUARD	1				0,053		21,29
43	000050139000	ALL.SCR. M 6X 10	1		M 6 x 10 DIN 912-8.8 C4P		0,004		1,55
44	000050081200	SPRING WASHER A 6	1		A 6 DIN 137 - A3C		0,001		0,46
45	_nopart	Not in this engine	-						
46	000050177100	HEXSCREW M 6X 16	1		M 6 x 16 DIN 933-8.8 A3C		0,005		1,46
47	000050158400	PIPE CLIP 14/15	2		14 / 15		0,012		8,87
48	000050144500	FLAT WASHER 6,4	1		6,4 DIN 125-St A3C		0,001		0,46

WWW.WOBIS.PL

Pos.	Part no.	Description	Qty.	Parts return	Notice	Add. notice	kg	dDPW	List price
49	000050144400	HEXAGON NUT M 6	1	●	M 6 DIN 934 - 8 A3C		0,002		1,27
50	_noorder	No single order	-	●					
51	000050590000	CLAMP 12,0	1	●	12,0		0,002		8,92
52	000005235602	STICKER "DIESEL" STICKER ""DIESEL""	1	●	"DIESEL"		0,001		2,46
53	000004098400	SPAC.TUBE 7X12X16,3	1	●	7 x 12 x 16,3		0,004		8,42
54	000050170900	SPRING WASHER 6	1	●	6 DIN 128 - A3C		0,001		0,46
55	000050323900	ALL.SCR.M 6X 30	1	●	M 6 x 30 DIN 912-8.8 A3C		0,009		2,37

WWW.WOBIS.PL

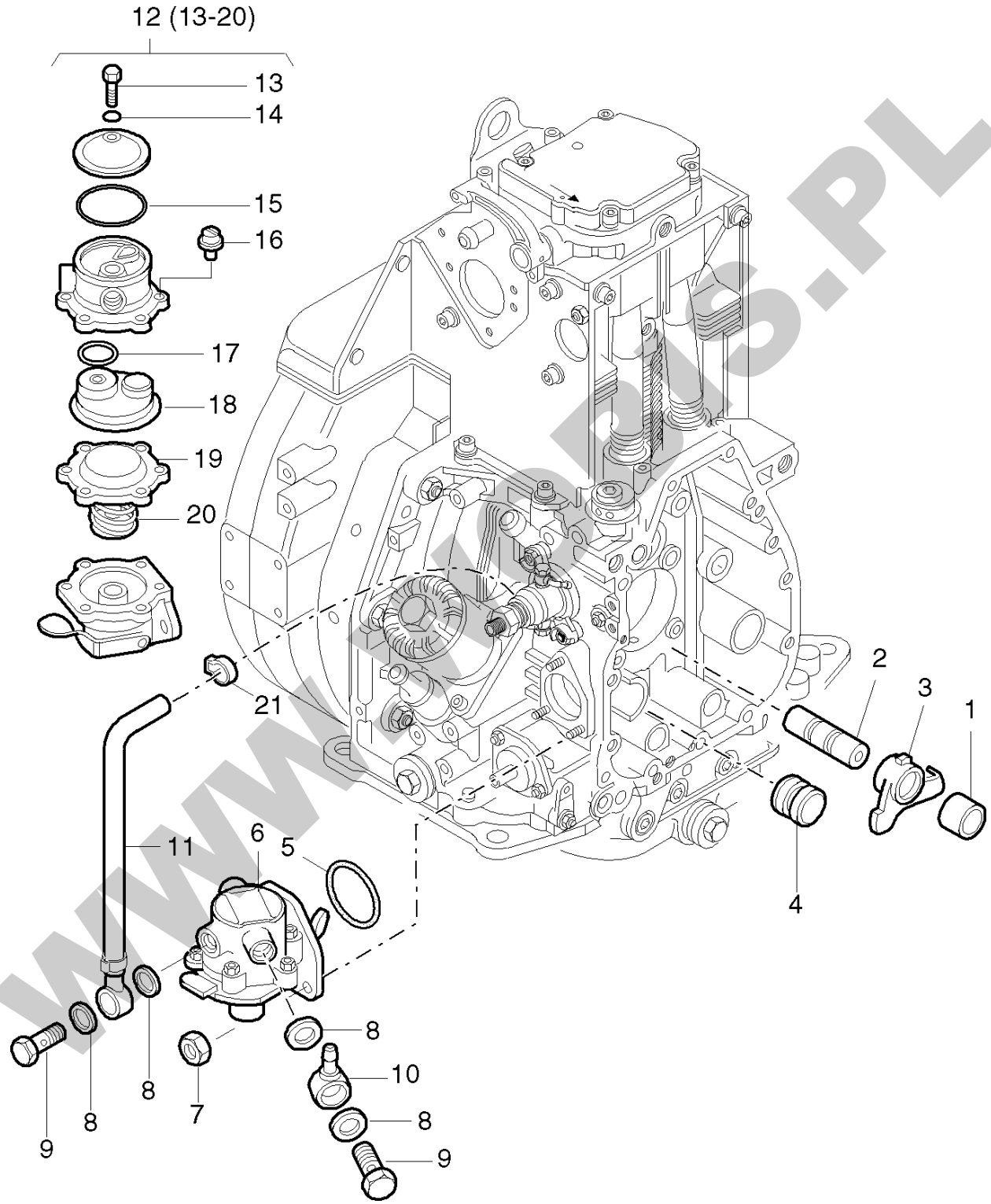

WWW.WOBIS.PL

Pos.	Part no.	Description	Qty.	Parts return	Notice	Add. notice	kg	dDPW	List price
1	000004011900	BUSH	1		15x24x17	""S""	0,050		13,47
2	000003796401	SHAFT	1			""S""	0,072		55,92
3	000004185400	LEVER F.FEED PUMP	1		part was replaced by 000004011810		0,088		159,93
4	000004023600	PLUG	1		ø 25 mm	""S""	0,020		15,42
5	000050331800	O-RING 35 X 2,8	1		35 x 2,8		0,001		6,28
6	000005301500	FUEL FEED PUMP	1				0,284		202,66
7	000050328300	HEXAGON NUT VM6	3		VM 6 DIN 980-8 A3C		0,002		1,46
8	000050001200	JOINT A14 X18	4		A 14 x 18 DIN 7603-Cu		0,001		1,05
9	000050006400	BANJO BOLT 10-3	2		10-3 DIN 7643		0,029		9,01
10	000050015900	RING PIECE NW8	1		NW 8 / 6		0,025		18,70
11	000001468811	FUEL PIPE	1				0,049		47,41
12	000049062501	VALV.PLAT.W. O-RING	1		Reparatursatz, repair kit		0,075		99,28
13	_noorder	No single order	-						
14	_noorder	No single order	-						
15	000050399500	O-RING 37 X 2,5	1		37 x 2,5		0,001		7,46
16	_noorder	No single order	-						
17	_noorder	No single order	-						
18	_noorder	No single order	-						
19	_noorder	No single order	-						
20	_noorder	No single order	-						
21	000050590000	CLAMP 12,0	1		12,0		0,002		8,92

WWW.WOBIS.PL

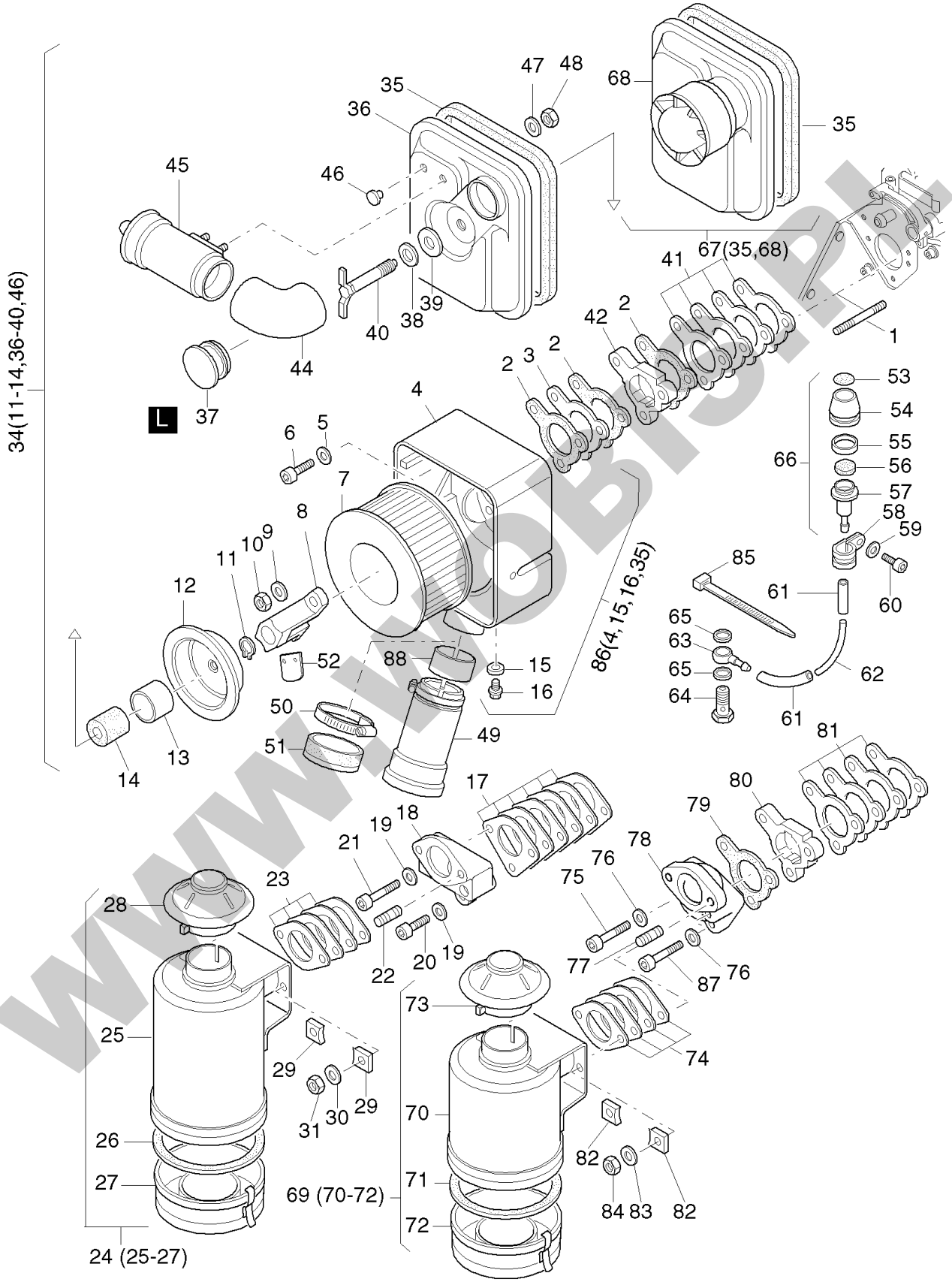

WWW.WOBIS.PL

Pos.	Part no.	Description	Qty.	Parts return	Notice	Add. notice	kg	dDPW	List price
1	000050038900	STUD M 8X 60	2		M 8 x 60 DIN 855-8.8		0,025		6,01
2	000004029800	GASKET	3				0,001	d3	3,09
3	000004029701	INSULATING FLANGE	1				0,011		13,51
4	_noorder	No single order	-						
5	000050095100	SPRING WASHER A 8	1		A 8 DIN 137 A3C		0,001		0,46
6	000050080800	ALL.SCREW M 8X42	1		M 8 x 42 DIN 912-8.8		0,022		4,28
7	000004030100	AIRFILTER ELEMENT	1				0,170	W2	56,51
8	000001490901	RETAINING BRACKET	1				0,071		43,68
9	000050148100	FLAT WASHER 8,4	2		8,4 DIN 125-St A3C		0,002		0,46
10	000050129500	HEXAGON NUT M 8	2		M 8 DIN 985-8 A3C		0,002		2,82
11	000050412000	CIRCLIP 10 X 1	1		A 10 x 1 DIN 471		0,001		0,46
12	000005039200	CENTRING COVER	1				0,308		56,88
13	000005039300	BUSH 33X35X23,5	1		33 x 35 x 23,5		0,019		10,10
14	000003579400	SEALING RING	1				0,012		19,43
15	000050000900	JOINT A8X11,5	1		A 8 x 11,5 DIN 7603-Cu		0,001		0,46
16	000050137900	CLOS.SCREW M8X1	1		M 8 x 1 DIN 7604		0,006		5,78
17	_nopart	Not in this engine	-						
18	_nopart	Not in this engine	-						
19	_nopart	Not in this engine	-						
20	_nopart	Not in this engine	-						
21	_nopart	Not in this engine	-						
22	_nopart	Not in this engine	-						
23	_nopart	Not in this engine	-						
24	_nopart	Not in this engine	-						

WWW.WOBIS.PL

Pos.	Part no.	Description	Qty.	Parts return	Notice	Add. notice	kg	dDPW	List price
25	_noorder	No single order	-						
26	_nopart	Not in this engine	-						
27	_nopart	Not in this engine	-						
28	_nopart	Not in this engine	-						
29	_nopart	Not in this engine	-						
30	_nopart	Not in this engine	-						
31	_nopart	Not in this engine	-						
34	000001449710	COVER F. AIRFILTER	1				0,772		259,44
35	000004061501	SEALING STR. 626 MM	1		630 mm		0,110		36,08
36	_noorder	No single order	-						
37	000005039402	CLOSING COVER	1				0,012		8,42
38	000003814100	INSULATING DISC	1				0,002		4,55
39	000005038700	WASHER 11 X 36 X 3	1		11 x 36 x 3		0,022		5,60
40	000001490800	WING SCREW	1				0,074		54,83
41	000001449100	GASKET AIRFILTER	1				0,030		13,92
42	000004053101	INTERMEDIATE FLANGE	1				0,069		39,68
44	000005038910	ELBOW F. CYCLON	1				0,087		31,90
45	000001491010	CYCLONE	1				0,258		163,44
46	000050411900	CLOSING PLUG 7	2		F 2 PHT SCHW.		0,001		4,78
47	000050120000	DISC A 6,4	2		A 6,4 DIN 9021-St A3C		0,003		0,46
48	000040028300	HEX.NUT M 6	2		VM 6 DIN 980 C3P		0,003		2,18
49	000001471200	CYCLONE	1				0,279		259,76
50	000050406600	HOSE CLIP 40/60	1		40 / 60		0,036		10,10
51	000001481400	CAP AIR INTAKE	1				0,044		43,77

WWW.WOBIS.PL

Pos.	Part no.	Description	Qty.	Parts return	Notice	Add. notice	kg	dDPW	List price
52	000005033500	VALVE PLATE	1			""S - Z"" (f.Pos. 66)	0,001		2,46
53	000005044501	INDIC. PLATE	1		part was replaced by 000005044502		0,001		10,69
54	000005043601	RUBBER CAP	1				0,002		29,94
55	000005045600	SIGNAL RING	1		(grün, green, vert, verde)		0,001		2,05
56	000005137200	FILTER	1		Filter, Filtre, Filtro ø 20 mm		0,001		1,05
57	000005043700	ADAPTER	1				0,014		42,32
58	000050173500	PIPE CLIP 10/15	1		10 / 15		0,010		7,14
59	000050170900	SPRING WASHER 6	1		6 DIN 128 - A3C		0,001		0,46
60	000050170600	ALL.SCR.M 6X 20	1		M 6 x 20 DIN 912-8.8 A3C		0,007		1,77
61	000005325400	FUEL HOSE 3,5 X 50	2		3,5 x 50		0,002		2,14
62	000005044610	HOSE 2X4 X 135	1		2 x 4 x 135		0,004		9,65
63	000050015700	RING PIECE NW3	1		NW 3		0,007		9,87
64	000050006100	BANJO BOLT 4-5-3	1		4-5-3 DIN 7643		0,007		6,55
65	000050000900	JOINT A8X11,5	2		A 8 x 11,5 DIN 7603-Cu		0,001		0,46
66	000001499801	MAINT.INDICATOR	1		part was replaced by 000001499802		0,026		85,54
67	000001539300	COVER F. AIRFILTER	1				0,470		237,87
68	_nopart	Not in this engine	-						
69	000001647100	OILBATH AIRFILTER	1				1,825		466,69
70	_noorder	No single order	-						
71	000049038000	PACKING RING	1				0,012		12,79
72	000049037900	OIL CONTAINER	1				0,270		98,01
73	000040040400	RAIN PROTCT.CAP54MM	1				0,065		74,98
74	000001651401	GASKET AIRFILTER	1				0,026		14,56
75	000050392900	ALL.SCR.M 8 X 50	2		M 8 x 50 DIN 912 - 8.8 A3C		0,025		3,09

WWW.WOBIS.PL

Pos.	Part no.	Description	Qty.	Parts return	Notice	Add. notice	kg	dDPW	List price
76	000050095100	SPRING WASHER A 8	3		A 8 DIN 137 A3C		0,001		0,46
77	000050145700	STUD M 10X 20	2		M 10 x 20 DIN 835-8.8 A3C		0,020		3,87
78	000005173101	INTERMEDIATE FLANGE	1				0,353		236,46
79	000004029800	GASKET	1				0,001	d3	3,09
80	000004053101	INTERMEDIATE FLANGE	1				0,069		39,68
81	000001449100	GASKET AIRFILTER	1				0,030		13,92
82	000003945400	PLATE	2				0,047		12,97
83	000050135600	SPRING WASHER 10	2		10 DIN 128 A3C		0,002		0,46
84	000050145800	HEXAGON NUT M 10	2		M 10 DIN 934-8 A3C		0,011		2,05
85	000050358400	STRAP	1		200 x 4,8 mm SCHWARZ		0,001		0,68
86	000001498301	AIRFILTER HOUSING	1				1,104		251,43
87	000050177200	ALL.SCR.M 8X 80	1		M 8 x 80 DIN 912-8.8 A3C		0,035		6,14
88	_nopart	Not in this engine	-						
L	000050256600	SILICON SEALER	1				0,130		200,56

WWW.WOBIS.PL

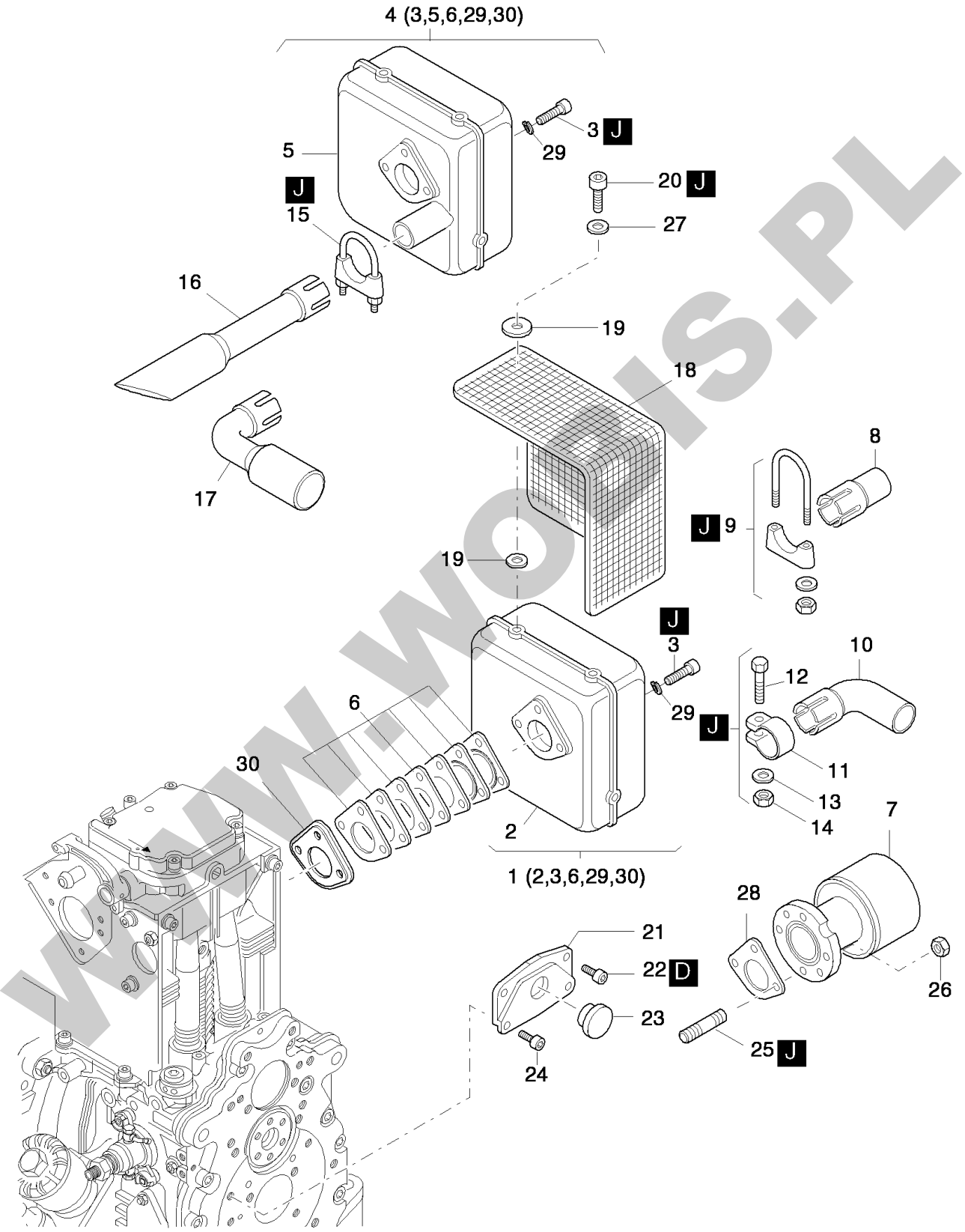
4 (3,5,6,29,30)
5
3 J
29
20 J
27
J
15
16
19
18
17
8
J 9
19
J
3
29
10
12
6
J
30
11
13
14
2
7
1 (2,3,6,29,30)
28
21
22 D
26
23
25 J
24

WWW.WOBIS.PL

Pos.	Part no.	Description	Qty.	Parts return	Notice	Add. notice	kg	dDPW	List price
1	000001558601	EXHAUST SILENCER	1				3,576		813,31
2	_noorder	No single order	-						
3	000050404000	ALL.SCR.M 8 X 30	3		M 8 x 30 DIN 912-8.8 C4P		0,017		2,59
4	000001507701	EXHAST.SILENC. TOP	1				3,523		813,31
5	_noorder	No single order	-						
6	000001489310	GASK.SET EXHSAUST S	1				0,040	d1	24,02
7	000001500901	EXHAUST SILENCER	1				0,830		265,67
8	000003998300	EXHAUST TUBE	1				0,112		86,00
9	000000873100	PIPE CLIP 40/42	1		40 / 42		0,108		26,62
10	000003740801	EXHAUST ELBOW	1		ø 38		0,140		128,26
11	000003740900	PIPE CLIP 41,5	1		41,5 mm		0,087		16,79
12	000050380000	HEXSCREW M 8 X 50	1		M 8 x 50 DIN 931-8.8 A3C part was replaced by 000050028100		0,025		2,82
13	000050148100	FLAT WASHER 8,4	1		8,4 DIN 125-St A3C		0,002		0,46
14	000040028400	HEX.NUT M 8	1		VM 8 DIN 980-8 C3A		0,008		2,37
15	000050388000	PIPE CLIP 1 1/8-28	1		1/8-28 883-2 A3C		0,103		16,93
16	000003997301	EXHAUST TUBE	1		1D41		0,253		134,45
17	000003997201	EXHAUST ELBOW	1				0,245		185,28
18	000005140700	GUARD	1				0,400		144,28
19	000005034202	SPRING WASHER	8		6,5 x 38		0,010		4,96
20	000050255700	ALL.SCR.M 6X 12	4		M 6 x12 DIN 912-8.8 C4A		0,005		1,77
21	000003985300	GUARD	1				0,055		34,90
22	000050135700	ALL.SCR.M10X 16	2		M 10 x 16 DIN 912-8.8 A3C		0,021		3,82
23	000040091400	CLOSING CAP	1		F24 SCHW.		0,004		3,82
24	000050165400	ALL.SCR.M 8X 16	2		M 8 x 16 DIN 912-8.8 A3C		0,009		2,82

WWW.WOBIS.PL

Pos.	Part no.	Description	Qty.	Parts return	Notice	Add. notice	kg	dDPW	List price
25	000050037800	STUD M 8X 22	2	🔴	M 8 x 22 DIN 835-10.9		0,012		3,09
26	000040028400	HEX.NUT M 8	2	🔴	VM 8 DIN 980-8 C3A		0,008		2,37
27	000050120000	DISC A 6,4	4	🔴	A 6,4 DIN 9021-St A3C		0,003		0,46
28	000001489310	GASK.SET EXHSAUST S	2	🟢			0,040		24,02
29	000050208500	SPRING WASHER 8	3	🔴	8 DIN 128 A3C		0,001		1,46
30	000004212601	SEALING PLATE	1	🔴			0,011		7,74
D	000050223300	LOCTITE 221	1	🟢	50 ML		0,077		102,74
J	000050283004	HIGH TEMP.PASTE	1	🟢			0,110		74,30

WWW.WOBIS.PL

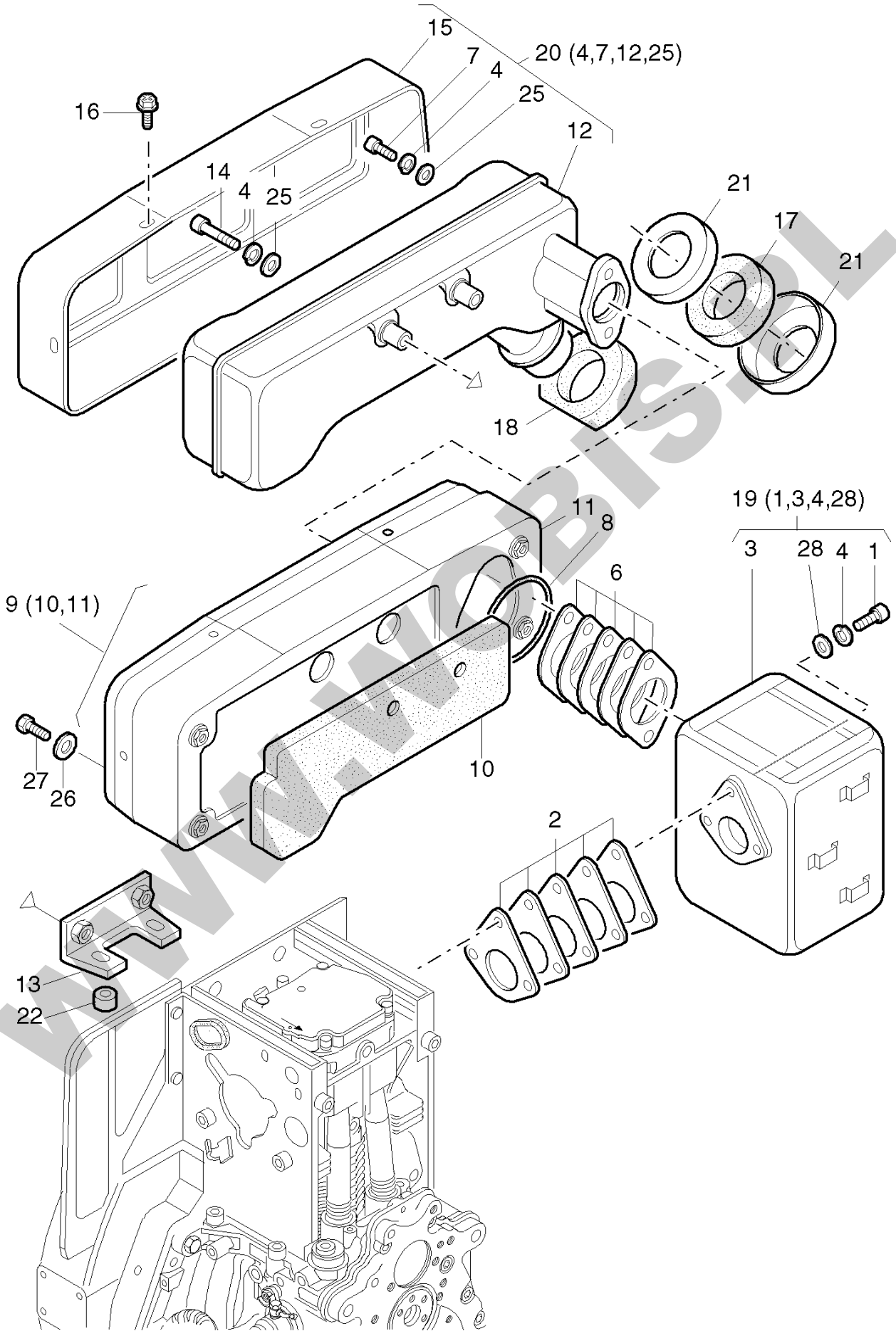
15
7
4
20 (4,7,12,25)
25
16
12
14
4
25
21
17
21
18
19 (1,3,4,28)
11
8
3
28
4
1
6
9 (10,11)
10
27
26
2
13
22

WWW.WOBIS.PL

Pos.	Part no.	Description	Qty.	Parts return	Notice	Add. notice	kg	dDPW	List price
1	000050429600	ALL.SCREW M 8 X 35	3		M 8 x 35 DIN 912-8.8 C4P		0,015		1,91
2	000001427900	GASKET EXHAUST SIL.	1				0,030		18,84
3	_noorder	No single order	-						
4	000050347301	SPRING WASHER 8	7		VHZ 8 A3C		0,001		0,46
6	000001309300	GASK.SET EXHST.SIL.	1				0,040		13,92
7	000050403900	ALL.SCR.M 8 X 25	2		M 8 x 25 DIN 912-8.8 C4P		0,015		2,37
8	_nopart	Not in this engine	-						
9	000001309400	EXHAUST CAPS.INSIDE	1				1,118		355,72
10	000004078800	INSULATION PLATE	1				0,008		15,83
11	_noorder	No single order	-						
12	_noorder	No single order	-						
13	000001307800	SUPPORT	1				0,023		60,11
14	000050404100	ALL.SCREW M 8 X 60	2		M 8 x 60 DIN 912-8.8 C4P		0,030		4,05
15	000001307501	EXHAUST CAPS.OUTSID	1				0,855		197,06
16	000050289200	HEXSCREW M 6X 14	8		M 6 x 12 KZ 1-8.8 A3D		0,005		1,91
17	000004079500	SEALING RING	1		33 x 62x 15		0,001		7,05
18	_nopart	Not in this engine	-						
19	000001309600	PRE SILENCER "C" PRE SILENCER ""C""	1				4,183		939,48
20	000001309500	SILENCER "C"	1				3,566		2518,56
21	000004079400	CENTRING DISC	2				0,014		10,42
22	000004064600	BUSH	2		8,4 x 19 x 5,5		0,010		8,42
25	000050115700	DISC 8,4	4		8,4 DIN433-St 140 HV		0,002		0,46
26	_nopart	Not in this engine	-						
27	_nopart	Not in this engine	-						

WWW.WOBIS.PL

Pos.	Part no.	Description	Qty.	Parts return	Notice	Add. notice	kg	dDPW	List price
28	000050115700	DISC 8,4	3	●	8,4 DIN433-St 140 HV		0,002		0,46

WWW.WOBIS.PL

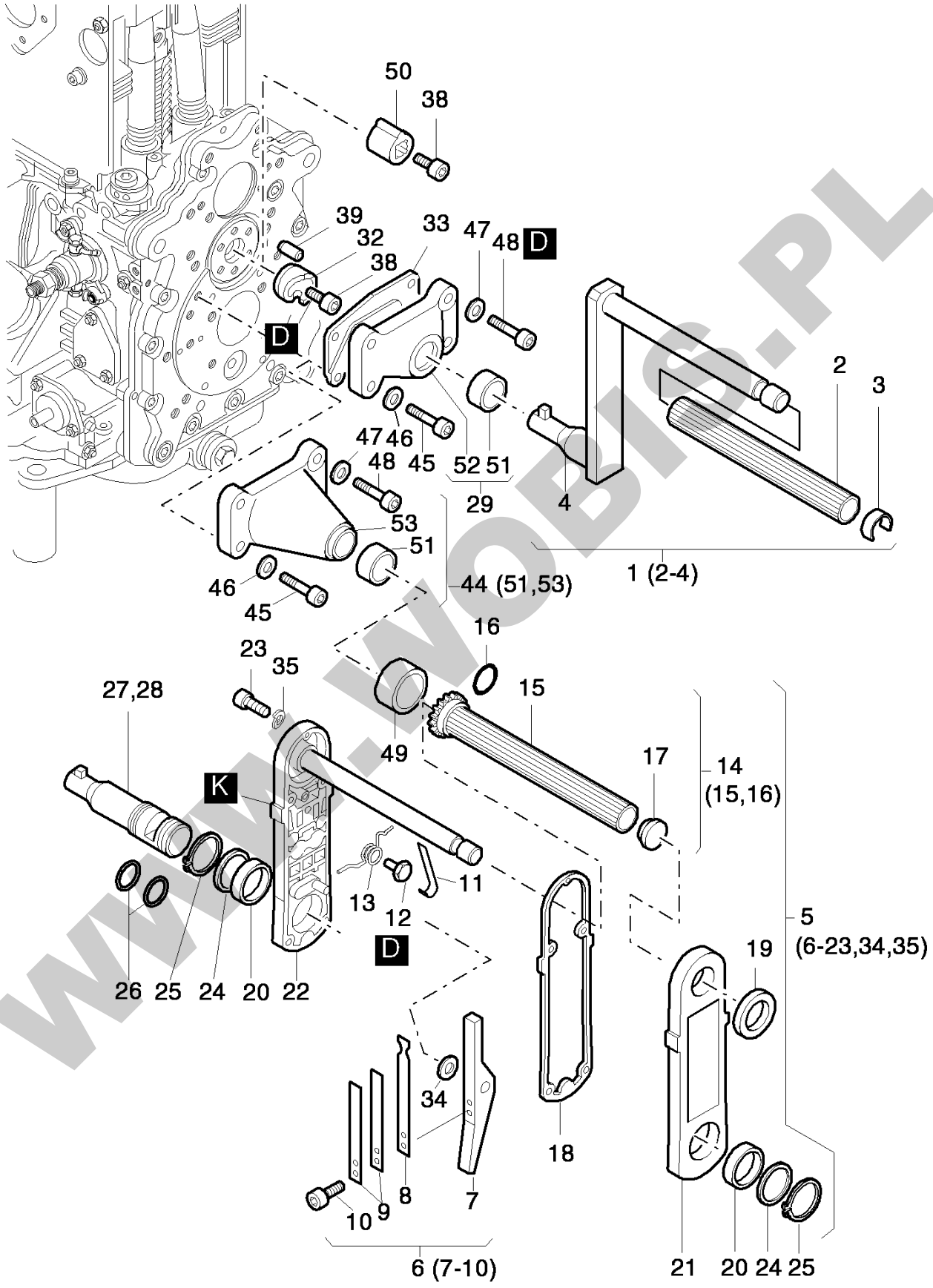
50
38
39
32
38
33
47
48
D
D
2
3
47
46
45
48
52
51
29
4
53
51
46
45
44 (51,53)
1 (2-4)
16
23
35
27,28
15
49
17
14
(15,16)
K
11
13
12
D
5
(6-23,34,35)
19
26
25
24
20
22
34
18
8
7
9
10
6 (7-10)
21
20
24
25

WWW.WOBIS.PL

Pos.	Part no.	Description	Qty.	Parts return	Notice	Add. notice	kg	dDPW	List price
1	000001248002	STARTING HANDLE 80	1		80 mm		1,350		315,45
1	000001426502	STARTING HANDLE 140	1		140 mm		1,450		429,52
1	000001426702	STARTING HANDLE 160	1		160 mm		1,500		433,34
1	000001433202	STARTING HANDLE 275	1		275 mm		1,870		491,40
1	000001469800	STARTING HANDLE 330	1		330 mm		2,370		511,33
1	000001407302	STARTING HANDLE 200	1		200 mm		1,600		472,38
2	000003522400	HANDLE	1		part was replaced by 000003522401		0,050		22,75
3	000003515400	SNAP RING	1				0,001		6,37
4	_noorder	No single order	-						
5	000001027805	CR.HANDLE-SAFETY A	1		"A"		1,440		814,27
6	000001011404	LEVER	1				0,125		166,85
7	_noorder	No single order	-						
8	000003812102	PLATE SPRING	1				0,007		14,01
9	000003917100	PLATE SPRING	2				0,006		12,10
10	000050316500	ALL.SCREW M 5X 8	2		M 5 x 8 DIN 6912-8.8 A3C		0,002		3,00
11	000003954900	PLATE SPRING	1				0,005		12,10
12	000003955600	HEXSCREW	1				0,003		12,10
13	000003955900	SPRING A	1		"A"		0,002		12,10
14	000001011310	HANDLE CPL.	1				0,100		210,39
15	_noorder	No single order	-						
16	000050169100	O-RING19 X 1,8	1		19 x 1,8		0,001		1,77
17	000050199200	CLOSING PLUG	1		V18 NATUR		0,002		2,46
18	000003813000	GASKET	1				0,001		7,28
19	000050194200	OIL SEAL 28X35X4	1		28 x 35 x 4		0,004		27,07

WWW.WOBIS.PL

Pos.	Part no.	Description	Qty.	Parts return	Notice	Add. notice	kg	dDPW	List price
20	000050193400	BUSH	2				0,014		11,65
21	_noorder	No single order	-						
22	_noorder	No single order	-						
23	000050236600	ALL SCR.M 6X 25	5		M 6 x 25 DIN 6912-8.8 A3C		0,006		3,00
24	000003928610	SHIM 30X38X0,10	0... 2		30 x 38 x 0,10		0,001		4,37
25	000050194300	CIRCLIP AK 30 X 1,5	2		A 30 x 1,5 K DIN 983		0,003		4,60
26	000050258500	O-RING 26 X1,5	2		26 x 1,5		0,001		1,77
27	000001421102	CR-HANDLE SHAFT 275	1		275 mm		0,910		422,47
27	000001411402	CR-HANDLE SHAFT 200	1		200 mm		0,720		354,49
27	000001469700	CR-HANDLE SHAFT 330	1		330 mm		1,350		405,86
27	000001187202	CR-HANDLE SHAFT 80	1		80 mm		0,410		287,97
27	000001426902	CR-HANDLE SHAFT 160	1		160 mm		0,670		355,13
27	000001426802	CR-HANDLE SHAFT 140	1		140 mm		0,585		340,52
28	_nopart	Not in this engine	-						
29	000001463600	GUIDING SHELL	1				0,200		130,86
32	000004020310	CRANK JAW LEFT	1				0,054		151,83
33	000003985300	GUARD	1				0,055		34,90
34	000050195800	SHIM 10X16X1,0	1		10 x 16 x 0,5 DIN 988		0,001		1,46
35	000050170900	SPRING WASHER 6	5		6 DIN 128 - A3C		0,001		0,46
38	000050134900	ALL.SCR.M 8X 16	1		M 8 x 16 DIN 6912-8.8 A3C		0,009		3,23
39	000050387100	CYL.PIN 5X20	1		5 M 6 x 20 DIN 6325		0,003		3,09
44	000001459500	GUIDING SHELL	1		80 - 200 mm		0,274		153,74
44	000001433300	GUIDING SHELL	1		200 - 265 mm	""C""	0,269		170,26
45	000050183000	ALL.SCR. M 8X 35	2		M 8 x 35 DIN 912-8.8 A3C		0,018		1,59

WWW.WOBIS.PL

Pos.	Part no.	Description	Qty.	Parts return	Notice	Add. notice	kg	dDPW	List price
46	000050148100	FLAT WASHER 8,4	2		8,4 DIN 125-St A3C		0,002		0,46
47	000050145900	FLAT WASHER 10,5	2		10,5 DIN 125-St A3C		0,004		1,46
48	000050327800	ALL.SCR.M10X 35	2		M 10 x 35 DIN 912-8.8 A3C		0,031		3,82
49	000003579700	SEALING RING	1			""C""	0,006		27,62
50	000004082900	CRANKING DEVICE	1		1/2''		0,066		72,57
51	000050387601	BUSH 1 INCH	1		1''		0,015		16,61
52	_noorder	No single order	-						
53	_noorder	No single order	-						
D	000050223300	LOCTITE 221	1		50 ML		0,077		102,74
K	000050342600	GREASE START.DEVICE	1		100 GRAMM part was replaced by 000050342601		0,100		

WWW.WOBIS.PL

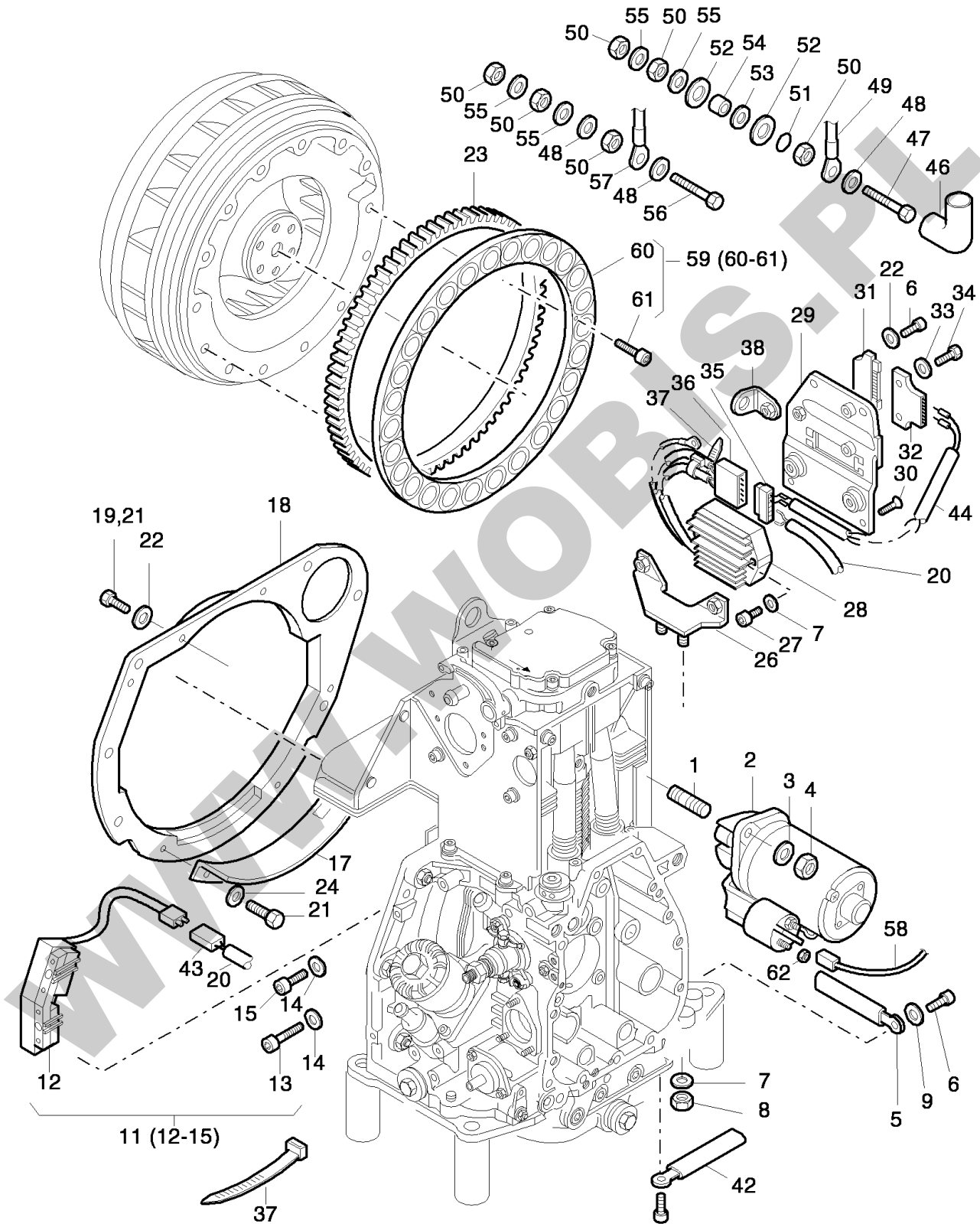
50
55
50
55
52
54
52
53
51
50
49
48
47
46
50
55
50
55
48
50
57
48
56
23
60
59 (60-61)
61
22
6
31
34
33
29
38
35
36
37
32
30
44
20
28
7
27
26
19,21
22
18
1
2
3
4
17
24
21
58
43
20
62
15
14
14
13
12
7
8
5
9
6
11 (12-15)
42
37

WWW.WOBIS.PL

Pos.	Part no.	Description	Qty.	Parts return	Notice	Add. notice	kg	dDPW	List price
1	000050486400	STUD M12X 50	2		M 12 x 50Fo DIN 835-8.8 A3C		0,066		8,24
2	000001721200	EL.STARTER 24V2,5KW	1		24 V - 2,5 kW	""S, Z, C""	4,205		1926,83
2	000001721000	STARTER 12V 2,0KW	1		12 V - 2,0 kW	""S, Z, C""	4,193		1483,85
3	000050093700	FLAT WASHER A 13	2		13 DIN 125-St A3C		0,006		1,77
4	000050380600	HEXAGON NUT M 12	2		M 12 DIN 970-8 A3C		0,014		3,00
5	000005001200	CLIP	2				0,005		7,92
6	000050149100	ALLEN SCREW M 6X 12	2		M 6 x 12 DIN 912-8.8 A3C		0,005		1,14
7	000050208500	SPRING WASHER 8	4		8 DIN 128 A3C		0,001		1,46
8	000050148000	HEXAGON NUT M 8	2		M 8 DIN 934-8 A3C		0,005		1,46
9	000050144500	FLAT WASHER 6,4	1		6,4 DIN 125-St A3C		0,001		0,46
11	_nopart	Not in this engine	-						
12	000001440710	COIL WITH WIRE 12V	1		12 V		0,400		453,09
12	000001440810	COIL WITH WIRE 24V	1		24 V		0,400		453,09
13	000050236600	ALL SCR.M 6X 25	1		M 6 x 25 DIN 6912-8.8 A3C		0,006		3,00
14	000050390701	CON.SPR.WASHER 6	2		6 DIN 6796 - 6 - FST ZN		0,001		1,09
15	000050448700	ALL.SCR.M 6X 30	1		M 6 x 30 DIN 6912-8.8 A3C		0,007		2,46
17	_nopart	Not in this engine	-						
18	000004031810	PARTING SHEET	1				0,233		83,49
19	_nopart	Not in this engine	-						
20	000001462800	ELECTRIC WIRE	0... 1				0,085		63,75
20	000001558300	ELECTRIC WIRE GEN.	0... 1		350W		0,085		72,75
21	000050165500	HEXSCREW M 6X 12	5		M 6 x 12 DIN 933-8.8 A3C		0,004		1,55
22	000050170900	SPRING WASHER 6	6		6 DIN 128 - A3C		0,001		0,46
23	000004032310	GEARRING S/Z/C	1			""S, Z, C""	0,580		282,24

WWW.WOBIS.PL

Pos.	Part no.	Description	Qty.	Parts return	Notice	Add. notice	kg	dDPW	List price
24	_nopart	Not in this engine	-						
26	000001440402	SUPPORT	1				0,101		26,57
27	000050183000	ALL.SCR. M 8X 35	2		M 8 x 35 DIN 912-8.8 A3C		0,018		1,59
28	000001983900	REGULATOR 24V	1		24 V 24V		0,400		426,24
28	000001983800	TENS.REGULATOR 12V	1		12 V 12V		0,396		426,24
29	000001440100	FASTENING PLATE	1				0,362		106,70
30	000050422501	CTR.SUNK SCR. M6X12	2		M 6 x 12 DIN 7991 - 8.8 A3C		0,002		1,50
31	000050373700	PLUG SLEEVE HOUSING	1				0,005		17,47
32	000050373600	PIN TERM.HOUS.6 WAY	1				0,007		17,47
33	000050216300	WASHER 5,3	2		5,3 DIN 125-St A3C		0,001		0,46
34	000050335700	HEXSCREW M 5X 25	2		M 5 x 25 DIN 933-8.8 A3C		0,005		1,46
35	000050402100	PLUG SLEEVE HOUSING	1		4-P.		0,003		27,21
36	000050402000	PLUG HOUSING 4-P.	1				0,002		27,21
37	000050358400	STRAP	4		200 x 4,8 mm SCHWARZ		0,001		0,68
38	000001440500	SUPPORT	1				0,020		13,51
42	000005023900	CLIP	2				0,006		7,83
43	000050379700	PLUG HOUSING 2-P.	1				0,002		13,47
44	000001439400	WIRING HARNESS	1			Pos. 35 incl.	0,020		97,28
46	000040026600	PROTECTION CAP	1			""C""	0,005		11,42
47	000050400300	HEXSCREW M 8X 40	1		M 8 x 40 DIN 933-MS		0,020		9,01
48	000050179900	TOOTH.LOCK WASH.J 8	2		J 8,4 Zn DIN 6997 A3C		0,001		0,46
49	000001430800	ELECTRIC WIRE B+	1		"Plus"		0,055		49,50
50	000050023000	HEXAGON NUT M 8	6		M 8 DIN 934-MS		0,005		2,82
51	000050426900	SERRATED WASH. A8,4	1		A 8,4 DIN 6798 A3C		0,001		0,46

WWW.WOBIS.PL

Pos.	Part no.	Description	Qty.	Parts return	Notice	Add. notice	kg	dDPW	List price
52	000003814100	INSULATING DISC	2				0,002		4,55
53	000050426800	TOOTH.LOCK J 10,5	1		J 10,5 DIN 6797 A3C		0,001		0,46
54	000003814200	INSULATING TUBE	1				0,001		13,10
55	000050016800	DISC 8,4	2		8,4 DIN 125-MS		0,001		1,55
56	000050275300	HEXSCREW M 8X35	1		M 8 x 35 DIN 933-MS		0,018		9,37
57	000001430900	BATT. CABLE MINUS	1		"Minus"		0,070		45,59
58	000001193401	ELECT.WIRE START.50	1		Starter 50		0,017		40,50
59	_nopart	Not in this engine	-						
60	000001543600	MAGNETIC RING	1				1,155		269,95
61	000050446900	ALL.SCR. M 4 X 16	12		M 4 x 16 DIN 912-8.8 A3C Tuf. FLEC		0,002		1,59
62	000050344700	HEXAGON NUT M 8	1		M 8 DIN 936 - 5 A3C		0,004		1,46

WWW.WOBIS.PL

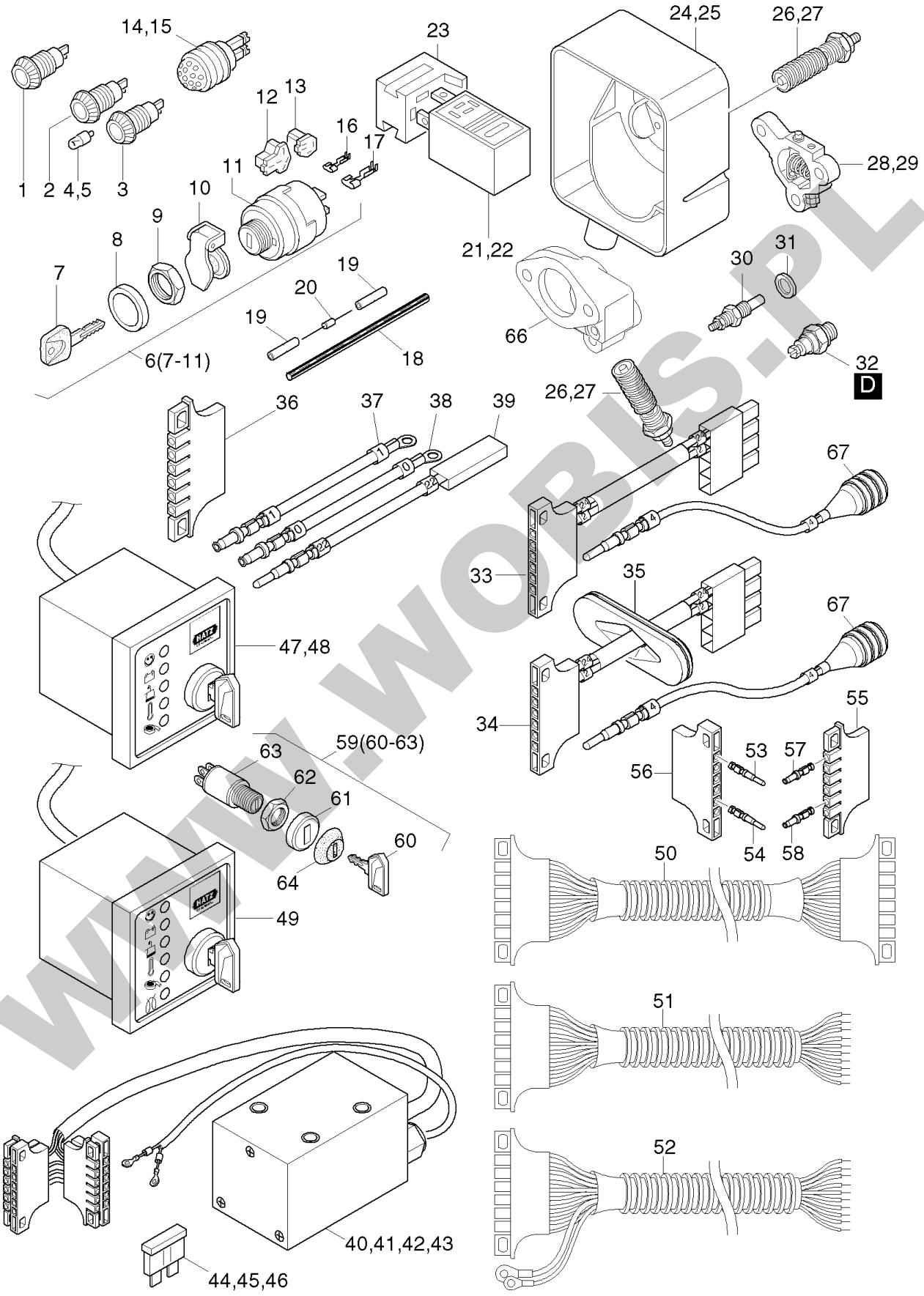
14,15
23
24,25
26,27
12
13
16
17
11
10
9
8
7
1
2
4,5
3
21,22
28,29
31
30
19
20
19
66
32
D
6(7-11)
18
36
37
38
39
26,27
67
33
35
67
47,48
34
55
59(60-63)
63
62
61
60
64
53
57
56
54
58
50
49
51
52
40,41,42,43
44,45,46

WWW.WOBIS.PL

Pos.	Part no.	Description	Qty.	Parts return	Notice	Add. notice	kg	dDPW	List price
1	000050176500	INDICATOR LAMP BAT	1		BATT.		0,012		26,03
2	000050176400	INDICATOR LAMP TEMP	1		TEMP.		0,012		26,03
3	000050176600	INDICATOR LAMP OIL	1		OIL		0,012		26,03
4	000040009700	BULB 12V-2W	0... 3		12 V - 2 W		0,002		8,42
5	000040009800	BULB 24V-2W	0... 3		24 V - 2 W		0,002		11,06
6	000050276502	GLOW START.SWITCH	1				0,191		297,75
7	000050345300	SWITCH BOX KEY	1		14603		0,004		29,94
8	_noorder	No single order	-						
9	_noorder	No single order	-						
10	000049050900	COVER	1				0,016		44,45
11	_noorder	No single order	-						
12	000050276700	PLUG SLEEVE HOUSING	1		6 - P		0,005		12,51
13	000050276600	PLUG SLEEVE HOUSING	1		4 - P		0,004		10,42
14	000050403600	GLOW PLUG INDICATOR	1		12 - 24 V		0,110		182,86
15	_nopart	Not in this engine	-						
16	000040074700	PLUG SLEEVE	5		B 6,3 - 2,5 BZ		0,001		3,09
17	000050276800	PLUG SLEEVE	4		9,5 - 6A		0,002		6,55
18	000003670000	INSUL.HOSE 120MM	2		4 x 120 mm		0,001		3,19
19	000050189200	MULTIPOLE CONNECTOR	4		EHQ 453-1		0,001		1,64
20	000050344400	DIODE	2		1 N 4007		0,001		2,55
21	000050275802	RELAY ENG.PROT. 12V	0... 1		12 V HATZ MSR		0,050		464,87
22	000050275902	RELAY ENG.PROT. 24V	0... 1		24 V HATZ MSR		0,050		513,92
23	000050276000	SOCKET	1				0,021		23,89
24	000005035110	AIRFILTER HOUSING	0... 1		(24 V)		0,920		228,64

WWW.WOBIS.PL

Pos.	Part no.	Description	Qty.	Parts return	Notice	Add. notice	kg	dDPW	List price
25	_nopart	Not in this engine	-						
26	000050403700	GLOW PLUG 12V	0... 1		24 V Widerstand, resistor		0,082		166,94
27	_nopart	Not in this engine	-						
28	000001468201	HEATER FLANGE	1		12 - 24 V		0,100		327,37
29	_nopart	Not in this engine	-						
30	000050268600	TEMP.SWITCH C-HD220	1		TEMP. 12-24V		0,016		178,50
31	000005162400	BUSH 10,4X14X4	1		10,4 x 14 x 4		0,002		7,87
32	000050272200	OIL PRESSURE SWITCH	1		12 - 24V Oil n > 2300 min-1		0,031		47,46
33	000001403620	WIRING HARNESS	1				0,027		98,28
34	000001470100	WIRING HARNESS	1			""C""	0,041		109,29
35	000003993100	RUBBER SLEEVE	1			""C""	0,014		9,96
36	000050373700	PLUG SLEEVE HOUSING	1				0,005		17,47
37	000001574300	ELECTRIC WIRE 350MM	1		(1)		0,025		24,66
38	000001574402	ELECTRIC WIRE 450MM	1		(0) 450mm		0,011		20,84
39	000001526800	ELECTR.WIRE 360 MM	1		(22) 360mm		0,011		28,16
40	000001589300	POWERBOX 12V	1		12 V Powerbox II		0,671		1185,37
41	000001595700	POWERBOX 24V	1		24 V Powerbox II		0,300		967,79
42	000001591000	POWERBOX 12 V	1		12 V Powerbox III		0,612		1138,27
43	000001591100	POWERBOX 24V	1		24 V Powerbox III		0,617		1182,18
44	000050459300	FUSE LINK 10A	0... 1		10 A		0,002		11,19
44	000050430400	FUSE LINK 15A	0... 1		15 A		0,002		4,05
45	000050430700	FUSE LINK 30A	0... 1		30 A		0,002		4,05
46	000050433000	FUSE LINK 40A	1... 2		40 A		0,001		4,10
47	000001551802	INSTRUMENT BOX 12V	1		12 V, A 1		0,989		973,02

WWW.WOBIS.PL

Pos.	Part no.	Description	Qty.	Parts return	Notice	Add. notice	kg	dDPW	List price
48	000001569702	INSTRUMENT BOX 24V	1		24 V, A 1		0,998		1334,70
49	000001558901	INST.BOX 12/24V AUT	1		12 V / 24 V, Aut.		1,081		2193,10
50	000001611200	WIRING HARNESS	1		K 1 - 2 m		0,613		389,62
51	000001549801	WIRING HARNESS 2M	1		K 2 - 2 m		0,606		303,67
52	000001192710	WIRING HARNESS	1		K 3 - 2 m		0,838		354,26
53	000050374300	PIN TERM. 2,5-4,0	1		2,5 - 4,0		0,001		4,60
54	000050374100	PIN TERM. 0,5-1	5		0,5 - 1,0		0,001		4,60
55	000050373700	PLUG SLEEVE HOUSING	1				0,005		17,47
56	000050373600	PIN TERM.HOUS.6 WAY	1				0,007		17,47
57	000050373800	SLEEVE 0,5-1,0	5		0,5 - 1,0		0,001		4,60
58	000050373900	SLEEVE 1,5-2,5	1		1,5 - 2,5		0,001		4,60
59	000050384401	STARTING SWITCH	1				0,139		196,01
60	000050404900	SWITCH BOX KEY	1		Nr. 14644		0,012		23,52
61	_noorder	No single order	-						
62	_noorder	No single order	-						
63	_noorder	No single order	-						
64	000005126402	PROTECTION CAP	1				0,002		7,92
66	_nopart	Not in this engine	-						
67	000001193211	ELECTRIC WIRE	1		(4)		0,027		30,49
D	000050223300	LOCTITE 221	1		50 ML		0,077		102,74

WWW.WOBIS.PL

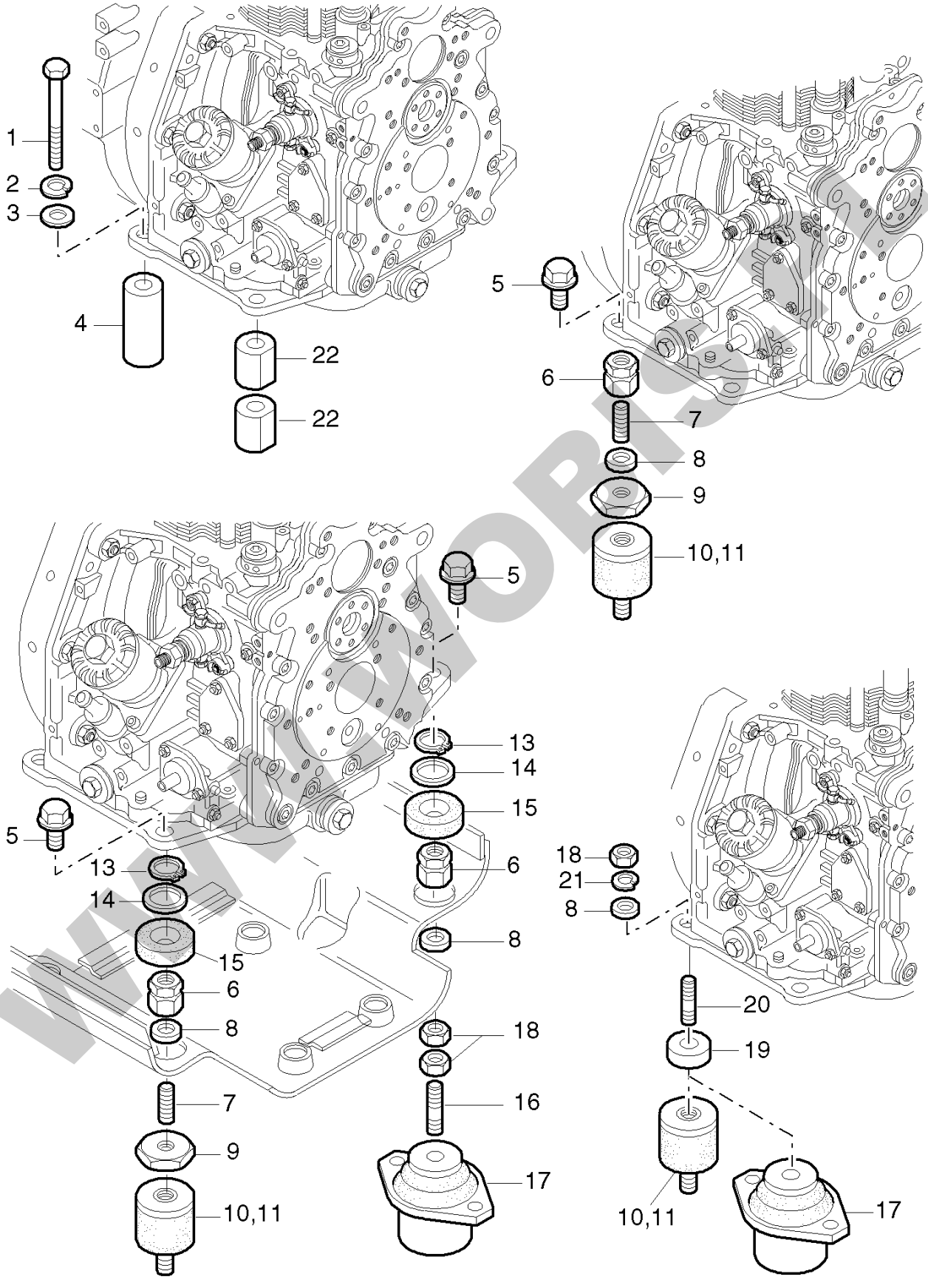
1
2
3
4
22
22
5
6
7
8
9
10,11
5
13
14
15
6
8
18
16
17
7
9
10,11
5
13
14
15
6
8
18
21
8
20
19
10,11
17

WWW.WOBIS.PL

Pos.	Part no.	Description	Qty.	Parts return	Notice	Add. notice	kg	dDPW	List price
1	_noorder-1	M10 x ... DIN 933 measure length	-						
2	000050002900	SPRING WASHER 10	4		A 10 DIN 128		0,002		1,46
3	000050070600	DISC 10,5	4		10,5 x 25 x 4 DIN 7349 A3C		0,011		3,00
4	000005000800	SPACER TUBE13X36X45	3		13 x 36 x 45		0,310		34,17
4	000003995400	SPACER TUBE	3		13 x 36 x 13		0,090		23,57
5	000050386600	HEXSCREW M10X 20	4		M 10 x 20 A3C W 158.12 - 10.9		0,025		6,87
6	000003993700	NUT M10 X 27,5	4		M 10 x 27,5		0,075		17,93
7	000003993500	GRUB SCREW M10X30	4		M 10 x 30		0,013		11,51
8	000050070600	DISC 10,5	4		10,5 x 25 x 4 DIN 7349 A3C		0,011		3,00
9	000003993400	DISC 10,5X55X5	4		10,5 x 55 x 5		0,095		21,29
10	000050386700	ANTI VIBR.MT.B50X45	4		40 Shore		0,168		46,77
11	000050386800	ANTI VIBR.MNT.50X45	4		55 Shore		0,177		46,77
13	000050020400	CIRCLIP 24X1,2	4		A 24 x 1,2 DIN 471		0,002		2,05
14	000003592301	WASHER 26,1X38X1	4		26,1 x 38 x 1		0,005		7,83
15	000003755300	GASKET	4		46/16		0,004		7,83
16	000003993602	GRUB SCREW M10 X 58	4		M 10 x 58		0,028		18,79
17	000050323600	HYDRO BUFFER	4		V 12 / 600		0,690		230,05
18	000050145800	HEXAGON NUT M 10	4		M 10 DIN 934-8 A3C		0,011		2,05
19	000003995400	SPACER TUBE	2... 4		13 x 36 x 13		0,090		23,57
20	000050124800	STUD M10X 40	4		M 10 x 40 DIN 939		0,028		6,28
21	000050135600	SPRING WASHER 10	4		10 DIN 128 A3C		0,002		0,46
22	000005020300	SPAC.DISC 13 CHAMF.	2		f. Höhe 13, f. height 13		0,036		35,35
22	000005018100	SPAC.SLEEV.45 CHAMF	2		f. Höhe 45, f. height 45		0,118		72,85

WWW.WOBIS.PL

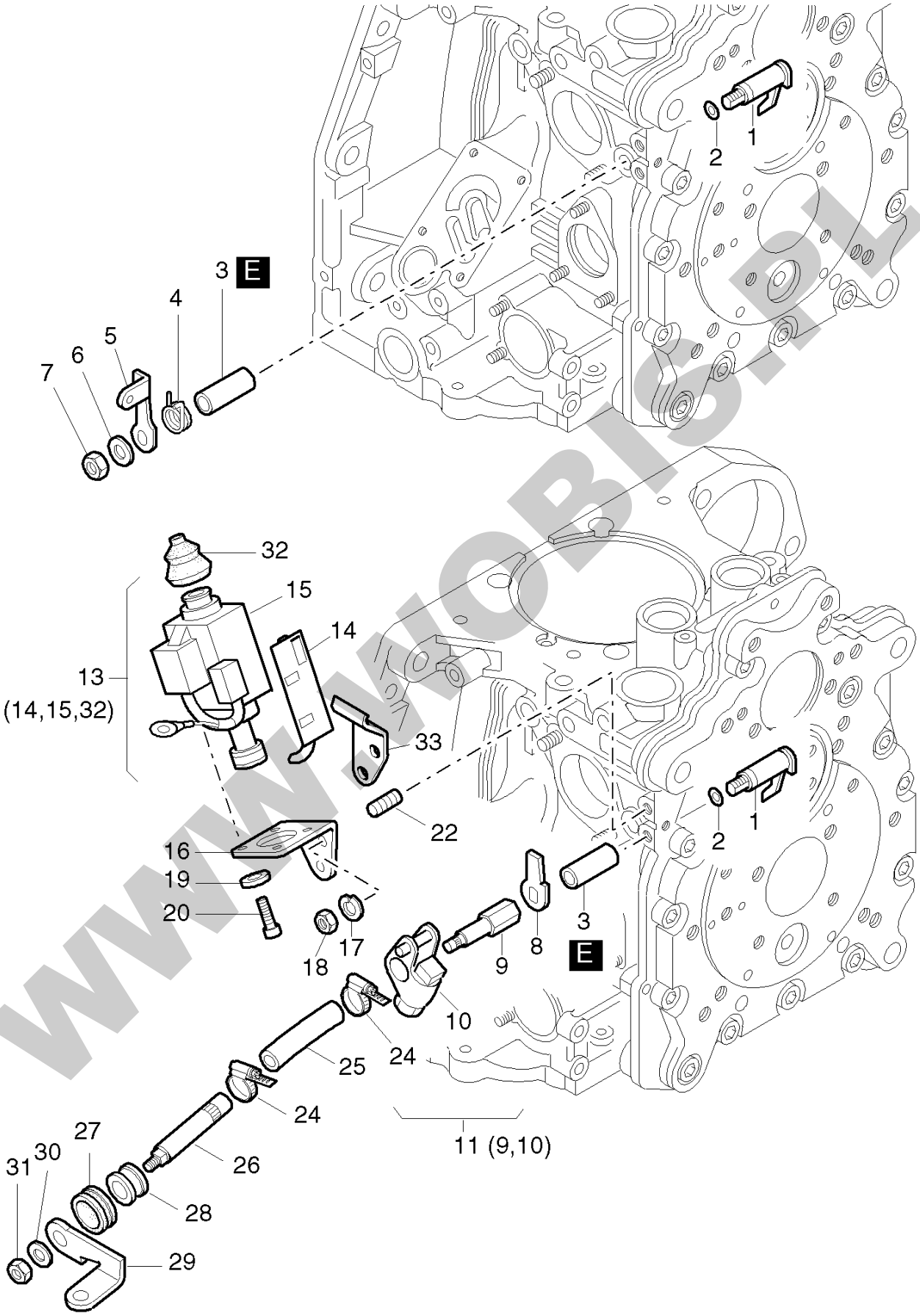
1
2
3 E
4
5
6
7
32
15
14
13
(14,15,32)
33
22
16
19
20
18
17
9
8
3 E
10
24
25
24
26
11 (9,10)
27
30
31
28
29

WWW.WOBIS.PL

Pos.	Part no.	Description	Qty.	Parts return	Notice	Add. notice	kg	dDPW	List price
1	000001254604	LEVER CPL.	1				0,018		44,27
2	000050343300	O-RING 4,6 X 1,85	1		4,6 x 1,85		0,001		1,14
3	000004021400	BUSH	1				0,007		22,89
4	000004021800	SPRING	1				0,002		6,92
5	000004021700	LEVER	1		part was replaced by 000004021701		0,011		
6	000050144500	FLAT WASHER 6,4	1		6,4 DIN 125-St A3C		0,001		0,46
7	000050328300	HEXAGON NUT VM6	1		VM 6 DIN 980-8 A3C		0,002		1,46
8	000005209200	SUPPORT	1				0,005		19,75
9	_noorder	No single order	-						
10	000001493111	LEVER F.STOP MAGNT.	1				0,020		31,94
11	000001515300	SHAFT+LEVER STOPMAG	1				0,035		55,10
13	000001515500	LIFTING MAGNET 12V	1		12 V		0,412		833,83
13	000001515400	LIFTING MAGNET 24V	1		24 V		0,412		833,83
14	000005058400	CABLE HOLDER	1				0,014		13,60
15	_noorder	No single order	-						
16	000005023501	CONSOLE	1				0,039		18,20
17	000050170900	SPRING WASHER 6	2		6 DIN 128 - A3C		0,001		0,46
18	000050144400	HEXAGON NUT M 6	2		M 6 DIN 934 - 8 A3C		0,002		1,27
19	000050216300	WASHER 5,3	3		5,3 DIN 125-St A3C		0,001		0,46
20	000050112600	ALL.SCR.M 5X 10	4		M 5 x 10 DIN 6912-8.8 A3C		0,003		2,82
22	000050366800	STUD M 6X12	2		M 6 x 12 DIN 835-8.8 A3C		0,004		4,37
24	000040037300	CLAMP 8-12	2		7,5 SKZ SGT 8-12	""C""	0,006		9,37
25	000003999001	FUEL HOSE 7 X 70	1		7 x 70	""C""	0,005		7,69
26	000003996600	SHAFT	1			""C""	0,035		78,76

WWW.WOBIS.PL

Pos.	Part no.	Description	Qty.	Parts return	Notice	Add. notice	kg	dDPW	List price
27	000003565400	RUBBER SLEEVE	1			""C""	0,003		6,10
28	000005069200	BUSH F.STOP SHAFT	1			""C""	0,005		20,57
29	000004021700	LEVER	1		part was replaced by 000004021701		0,011		
30	000050144500	FLAT WASHER 6,4	1		6,4 DIN 125-St A3C		0,001		0,46
31	000050328300	HEXAGON NUT VM6	1		VM 6 DIN 980-8 A3C		0,002		1,46
32	000050248900	BELLOW	1				0,002		26,71
33	000005205701	SUPPORT	1				0,029		8,01
E	000050223400	LOCTITE 648	1				0,021		40,04

WWW.WOBIS.PL

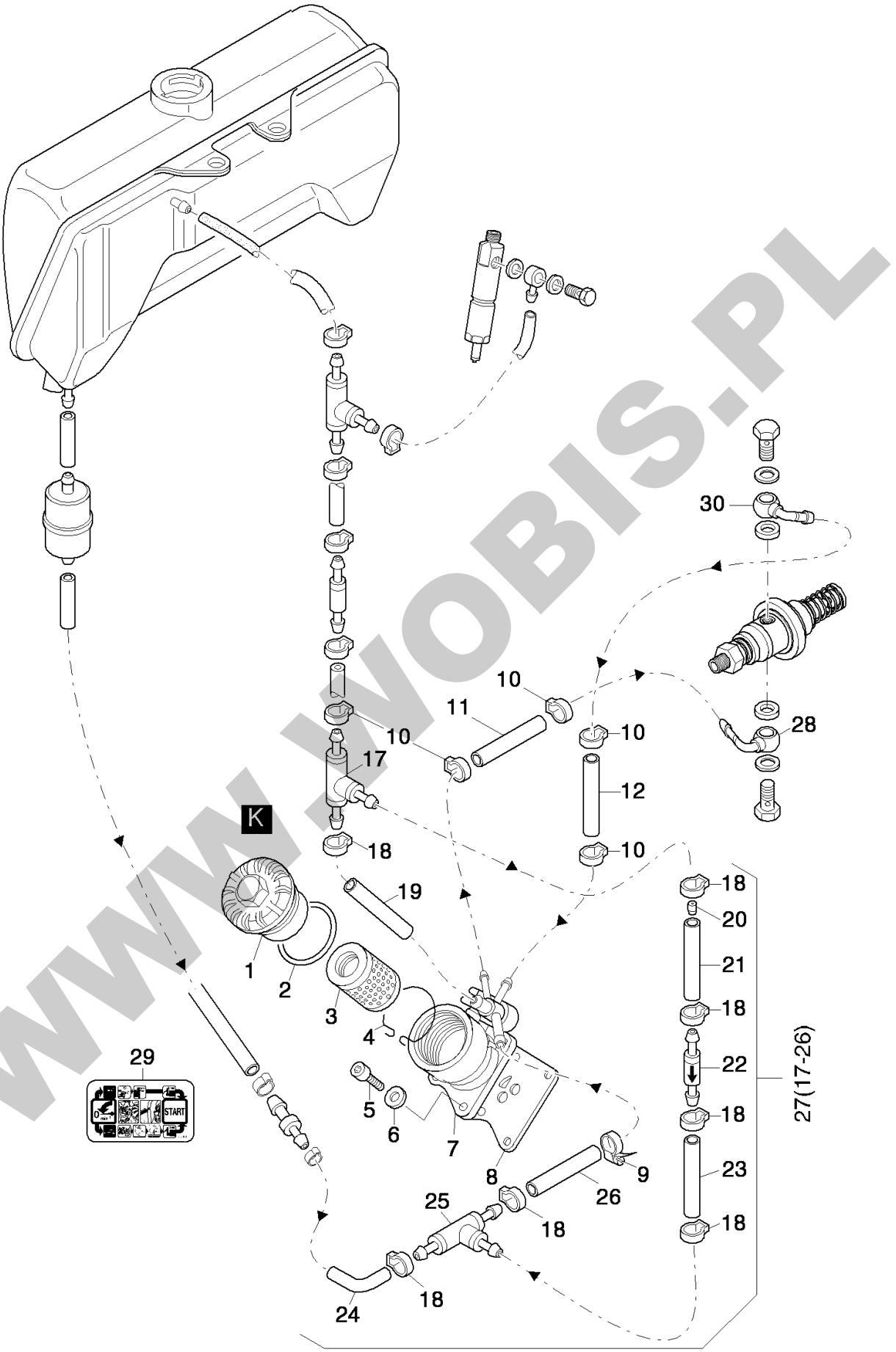
30
10
11
10
10
28
17
12
K
18
10
19
18
20
1
2
21
3
18
4
22
29
27(17-26)
5
18
6
7
8
9
23
26
25
18
18
18
24

WWW.WOBIS.PL

Pos.	Part no.	Description	Qty.	Parts return	Notice	Add. notice	kg	dDPW	List price
1	000001248901	COVER F.OILFILTER	1				0,102		79,99
2	000050329200	RECTANG.RNG.50X55X3	1		50 x 55 x 3		0,002		11,88
3	000001480000	OILFILT.ELEM.1D....	1				0,060		28,53
4	000004084001	LIFTING SPRING	1				0,001		7,96
5	000050170600	ALL.SCR.M 6X 20	4		M 6 x 20 DIN 912-8.8 A3C		0,007		1,77
6	000050081200	SPRING WASHER A 6	4		A 6 DIN 137 - A3C		0,001		0,46
7	000001452821	SHUT-OFF VAL.D31-81	1				0,386		545,91
8	000005068900	GASKET	1				0,006		10,24
9	000050357200	HOSE CLIP 7-11	1		7 - 11 SX5 SW4		0,003		9,69
10	000050570900	CLAMP 12,8	5		12,8		0,003		8,01
11	000005311800	FUEL PIPE 4,5X 200	1		4,5 x 200		0,019		9,69
12	000005322300	FUEL PIPE 4,5X110	1		4,5 x 110		0,012		7,28
17	000005309000	HOSE NIPPLE T NW 3	1		NW 3		0,002		7,78
18	000050570900	CLAMP 12,8	7		12,8		0,003		8,01
19	000005316000	FUEL PIPE 4,5X 30	1		4,5 x 30		0,003		1,96
20	000005305700	THROTTLE	1				0,001		9,46
21	000005343700	FUEL PIPE 5,3X 50	1		5,3 x 50		0,005		8,87
22	000001865000	NON-RETURN VALVE	1				0,003		37,49
23	000005315900	FUEL PIPE 4,5X 80	1		4,5 x 80		0,008		5,92
24	000005316200	FUEL PIPE 4,5X 35	1		4,5 x 35		0,003		1,91
25	000005242400	HOSE NIPPLE T NW 3	1		NW 3		0,002		7,74
26	000005316100	FUEL PIPE 4,5X 50	1		4,5 x 50		0,005		2,55
27	000001878701	FUEL P.NON RET.VALV	1				0,053		119,16
28	000005305600	BANJO CONNECTION	1				0,012		42,68

WWW.WOBIS.PL

Pos.	Part no.	Description	Qty.	Parts return	Notice	Add. notice	kg	dDPW	List price
29	000005126801	STICKER LABEL	1		part was replaced by 000005126802		0,001		
30	000005299701	BANJO CONNECTION	1				0,011		35,08
K	000050342600	GREASE START.DEVICE	1		100 GRAMM part was replaced by 000050342601		0,100		

WWW.WOBIS.PL

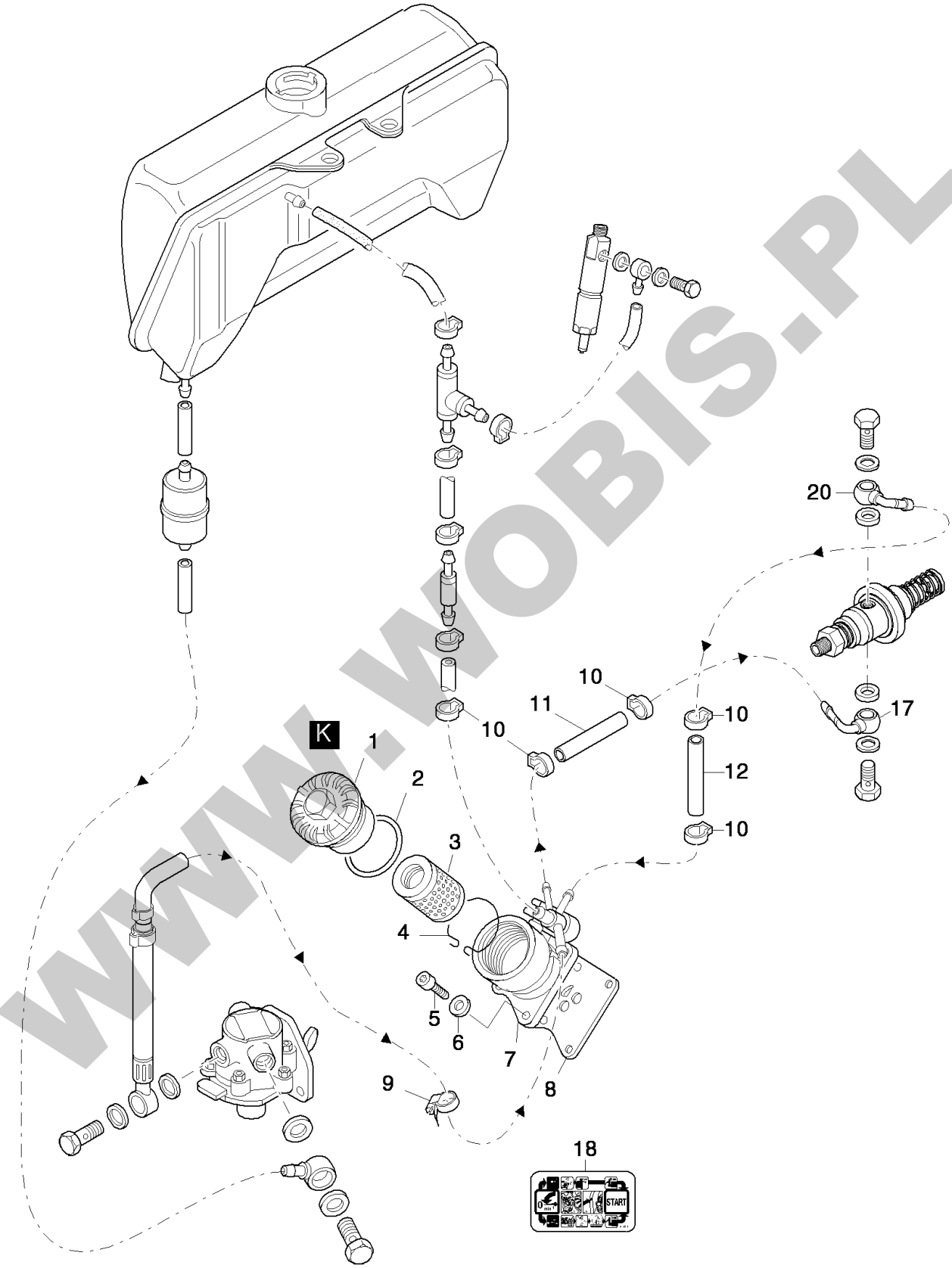

WWW.WOBIS.PL

Pos.	Part no.	Description	Qty.	Parts return	Notice	Add. notice	kg	dDPW	List price
1	000001248901	COVER F.OILFILTER	1				0,102		79,99
2	000050329200	RECTANG.RNG.50X55X3	1		50 x 55 x 3		0,002		11,88
3	000001480000	OILFILT.ELEM.1D....	1				0,060		28,53
4	000004084001	LIFTING SPRING	1				0,001		7,96
5	000050170600	ALL.SCR.M 6X 20	4		M 6 x 20 DIN 912-8.8 A3C		0,007		1,77
6	000050081200	SPRING WASHER A 6	4		A 6 DIN 137 - A3C		0,001		0,46
7	000001452821	SHUT-OFF VAL.D31-81	1				0,386		545,91
8	000005068900	GASKET	1				0,006		10,24
9	000050357200	HOSE CLIP 7-11	1		7 - 11 SX5 SW4		0,003		9,69
10	000050570900	CLAMP 12,8	5		12,8		0,003		8,01
11	000005311800	FUEL PIPE 4,5X 200	1		4,5 x 200		0,019		9,69
12	000005322300	FUEL PIPE 4,5X110	1		4,5 x 110		0,012		7,28
17	000005305600	BANJO CONNECTION	1				0,012		42,68
18	000005126801	STICKER LABEL	1		part was replaced by 000005126802		0,001		
20	000005299700		1						
K	000050342600	GREASE START.DEVICE	1		100 GRAMM part was replaced by 000050342601		0,100		

WWW.WOBIS.PL

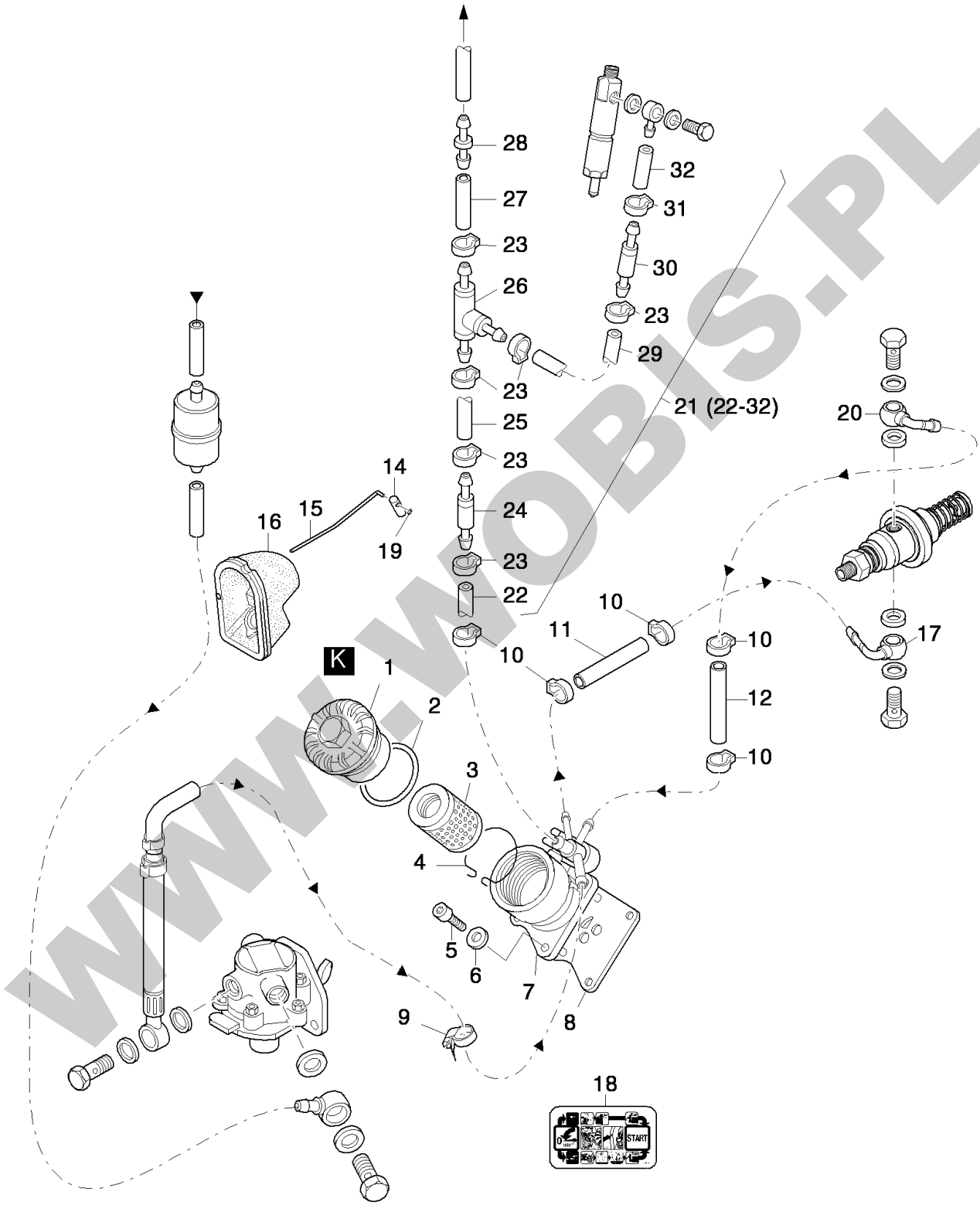
28
27
23
26
23
25
23
24
23
22
10
K
1
2
3
4
5
6
7
8
9
10
11
12
10
10
14
15
16
19
18
32
31
30
23
29
21 (22-32)
20
17
START

WWW.WOBIS.PL

Pos.	Part no.	Description	Qty.	Parts return	Notice	Add. notice	kg	dDPW	List price
1	000001248901	COVER F.OILFILTER	1				0,102		79,99
2	000050329200	RECTANG.RNG.50X55X3	1		50 x 55 x 3		0,002		11,88
3	000001480000	OILFILT.ELEM.1D....	1				0,060		28,53
4	000004084001	LIFTING SPRING	1				0,001		7,96
5	000050170600	ALL.SCR.M 6X 20	4		M 6 x 20 DIN 912-8.8 A3C		0,007		1,77
6	000050081200	SPRING WASHER A 6	4		A 6 DIN 137 - A3C		0,001		0,46
7	000001452821	SHUT-OFF VAL.D31-81	1				0,386		545,91
8	000005068900	GASKET	1				0,006		10,24
9	000050357200	HOSE CLIP 7-11	1		7 - 11 SX5 SW4		0,003		9,69
10	000050570900	CLAMP 12,8	5		12,8		0,003		8,01
11	000005311800	FUEL PIPE 4,5X 200	1		4,5 x 200		0,019		9,69
12	000005360300	FUEL PIPE 6 X 65	1		6 x 65		0,007		
14	000005014701	LINK BAR HEAD	1			""C""	0,004		
15	000005014811	CONNECTING LINK	1			""C""	0,008		
16	000005026801	RUBBER INSERT	1			""C""	0,083		
17	000005305600	BANJO CONNECTION	1				0,012		42,68
18	000005126801	STICKER LABEL	1		part was replaced by 000005126802		0,001		
19	000050414701	CIRCLIP KS 3	1				0,001		1,27
20	000005299701	BANJO CONNECTION	1				0,011		35,08
21	000001476910	FUEL PIPE	1		EPA2		0,127		139,37
22	000005318000	FUEL PIPE 4,5X 100	1		4,5 x 100 mm		0,009		5,73
23	000050570900	CLAMP 12,8	6		12,8		0,003		8,01
24	000000805502	VENT VALVE	1				0,004		14,01
25	000005309900	FUEL PIPE 4,5X 55	1		4,5 x 55 mm		0,005		2,91

WWW.WOBIS.PL

Pos.	Part no.	Description	Qty.	Parts return	Notice	Add. notice	kg	dDPW	List price
26	000005242400	HOSE NIPPLE T NW 3	1		NW 3		0,002		7,74
27	000004089710	FUEL HOSE 5,0 X 510	1		5 x 510 mm		0,052		23,61
28	000050279600	CONNECTING NIPPLE	1				0,006		19,47
29	000005318100	FUEL HOSE 5,0 X 60	1		5 x 60 mm		0,006		3,87
30	000005301200	NIPPLE	1				0,002		13,10
31	000050399801	CLAMP 11,3	1		11,3		0,002		7,60
32	000005318200	FUEL PIPE 3,5X 205	1		3,5 x 205 mm		0,019		7,23
K	000050342600	GREASE START.DEVICE	1		100 GRAMM part was replaced by 000050342601		0,100		

WWW.WOBIS.PL

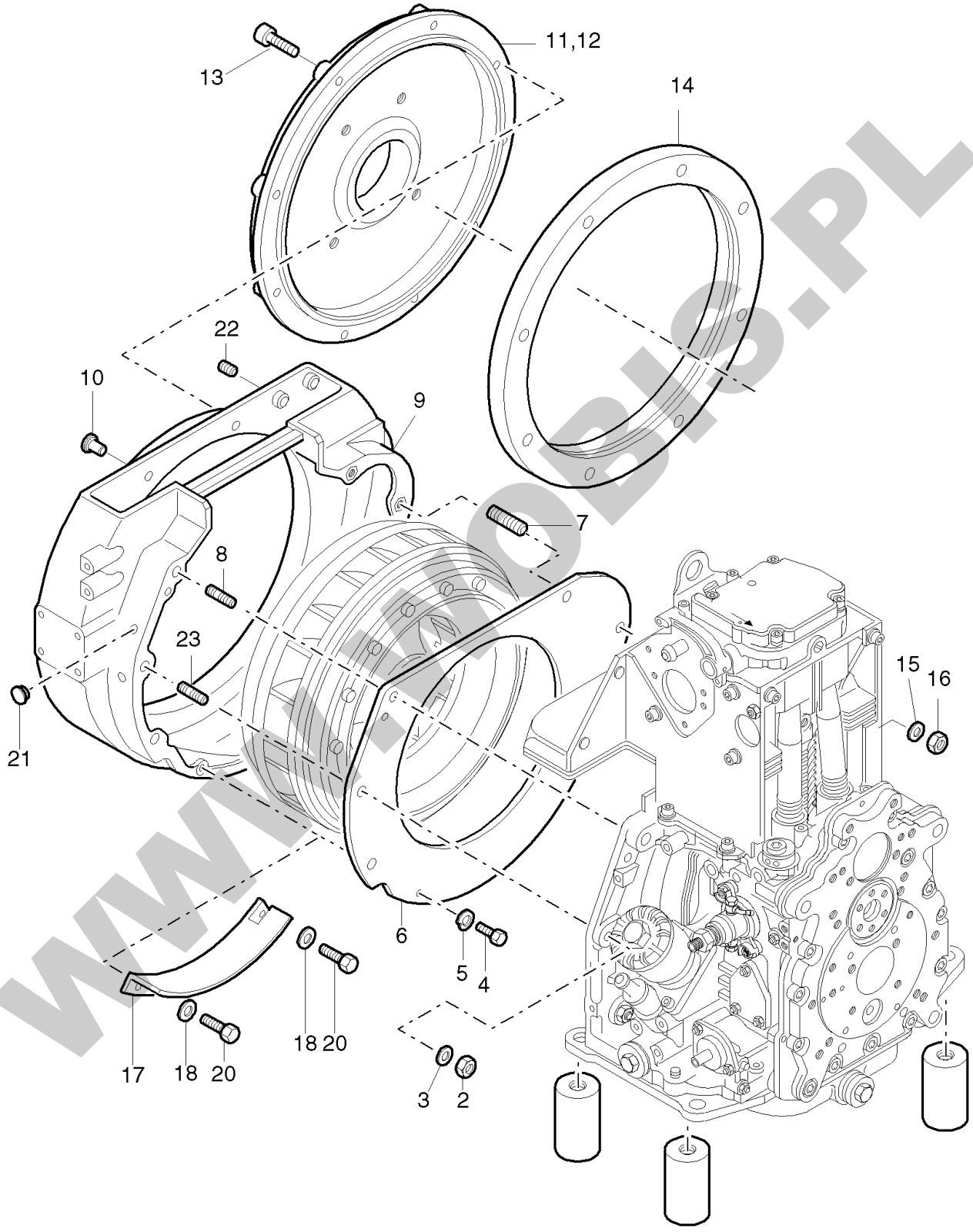

WWW.WOBIS.PL

Pos.	Part no.	Description	Qty.	Parts return	Notice	Add. notice	kg	dDPW	List price
2	000050145800	HEXAGON NUT M 10	4		M 10 DIN 934-8 A3C		0,011		2,05
3	000050145900	FLAT WASHER 10,5	4		10,5 DIN 125-St A3C		0,004		1,46
4	000050177100	HEXSCREW M 6X 16	2		M 6 x 16 DIN 933-8.8 A3C		0,005		1,46
5	000050170900	SPRING WASHER 6	2		6 DIN 128 - A3C		0,001		0,46
6	000004031100	PARTING SHEET	1			s.Grp Z05a Pos 18	0,378		83,49
7	000050475000	STUD M12FO X40	2		M 12 x 40 DIN 835-8.8 A3C		0,046		8,78
8	000050040900	STUD M10X 35	3		M 10 x 35 DIN 835 - 8.8		0,029		4,37
9	000001688900	INTERM.HOUS.1D30/41	1		SAE 6 1D30-1D41 ALU.		2,815		878,15
10	000050421600	CLOSING PLUG	8		12		0,001		1,68
11	000003976100	HOUSING SAE B	1		SAE "B" Ø 146,1		2,670		
12	_nopart	Not in this engine	-						
13	000050055200	ALL.SCR.M10X 60	8		M 10 x 60 DIN 912 - 8.8		0,046		5,78
14	_nopart	Not in this engine	-						
15	000050093700	FLAT WASHER A 13	2		13 DIN 125-St A3C		0,006		1,77
16	000050093600	HEXAGON NUT M 12	2		M12 DIN 934-8 A3C		0,017		2,82
17	_nopart	Not in this engine	-						
18	_nopart	Not in this engine	-						
20	_nopart	Not in this engine	-						
21	000050545800	CLOSING PLUG 10MM	2		10,5		0,001		2,46
22	000050226000	GRUB SCREW M 8X6	2		M 8 x 6 DIN 913-45H TU.FLEC		0,002		4,14
23	000050041200	STUD M10X 45	1		M 10 x 45 DIN 835 - 8.8		0,035		4,87

WWW.WOBIS.PL

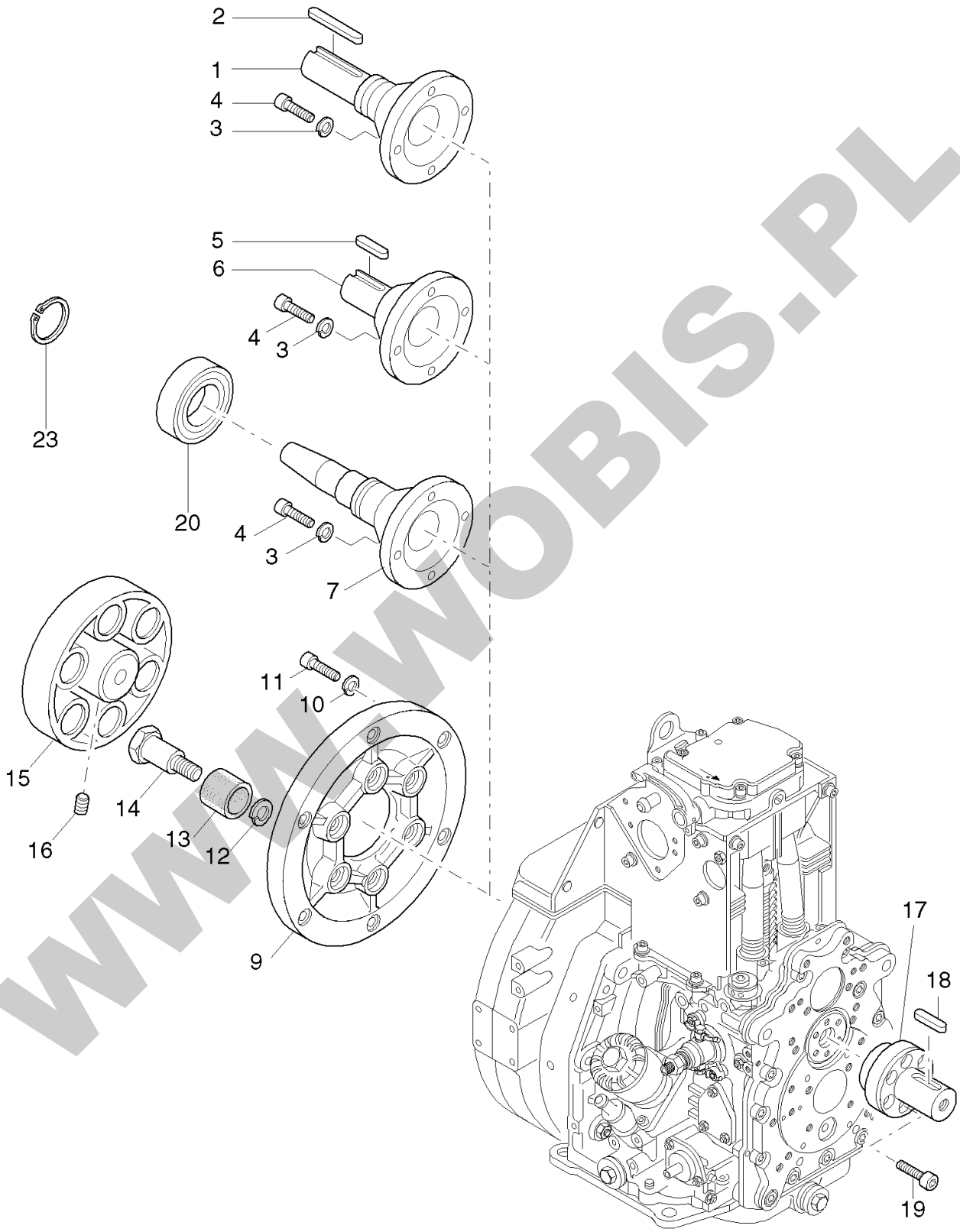

WWW.WOBIS.PL

Pos.	Part no.	Description	Qty.	Parts return	Notice	Add. notice	kg	dDPW	List price
1	000003952001	SHAFT 25,4X161,0	1		2 ø 1'' ZENTR.100		1,525		664,94
2	000003962700	FITTINGKEY A6,35X63	1		A 6,35 x 63 part was replaced by 000005141600		0,999		
3	000050208500	SPRING WASHER 8	4		8 DIN 128 A3C		0,001		1,46
4	000050171500	ALL.SCR.M 8X 25	4		M 8 x 25 DIN 912-8.8 A3C		0,015		2,59
5	000050011500	FITTINGKEY A 8 X 7 X 35	1		A 8 x 7 x 35 DIN 6885		0,014		3,46
6	000003954300	SHAFT 30X100	1		2 ø 30 mm ZENTR.100		2,228		500,50
7	000003953201	STUBSHFT.TAP.X177,5	1		4 (1'') keg., con. ZENTR.100		1,580		582,54
9	000003951700	FLANGE	1				1,850		343,57
10	000050208500	SPRING WASHER 8	6		8 DIN 128 A3C		0,001		1,46
11	000050366300	ALL.SCR.M 8X 20	6		M 8 x 20 DIN 912-8.8 A3C		0,013		2,46
12	000050061601	SPRING WASHER 12	6		VHZ 12		0,002		1,27
13	000003151000	RUBBER SHELL	6		SCHLAUCHST		0,015		14,01
14	000003046900	TAPPET	6				0,090		36,26
15	000003004602	COUNTER FLANGE	1				2,270		574,89
16	000050004600	GRUB SCREW M 8X16	1		M 8 x 16 DIN 916-45H A3C		0,003		3,00
17	000005007400	STUBSHAFT 25X65	1		25 x 65 ZENTR. 30		0,500		657,93
18	000050011500	FITTINGKEY A 8 X 7 X 35	1		A 8 x 7 x 35 DIN 6885		0,014		3,46
19	000050170700	ALL.SCR.M 6 X 16	6		M 6 x 16 DIN 912-8.8 A3C		0,006		1,77
20	000050479800	BALL REARING	1		EC 6307 LLu C3/2A		0,448		178,59
23	000050021100	CIRCLIP 35X1,5	1		A 35 x 1,5 DIN 471		0,003		3,82

WWW.WOBIS.PL

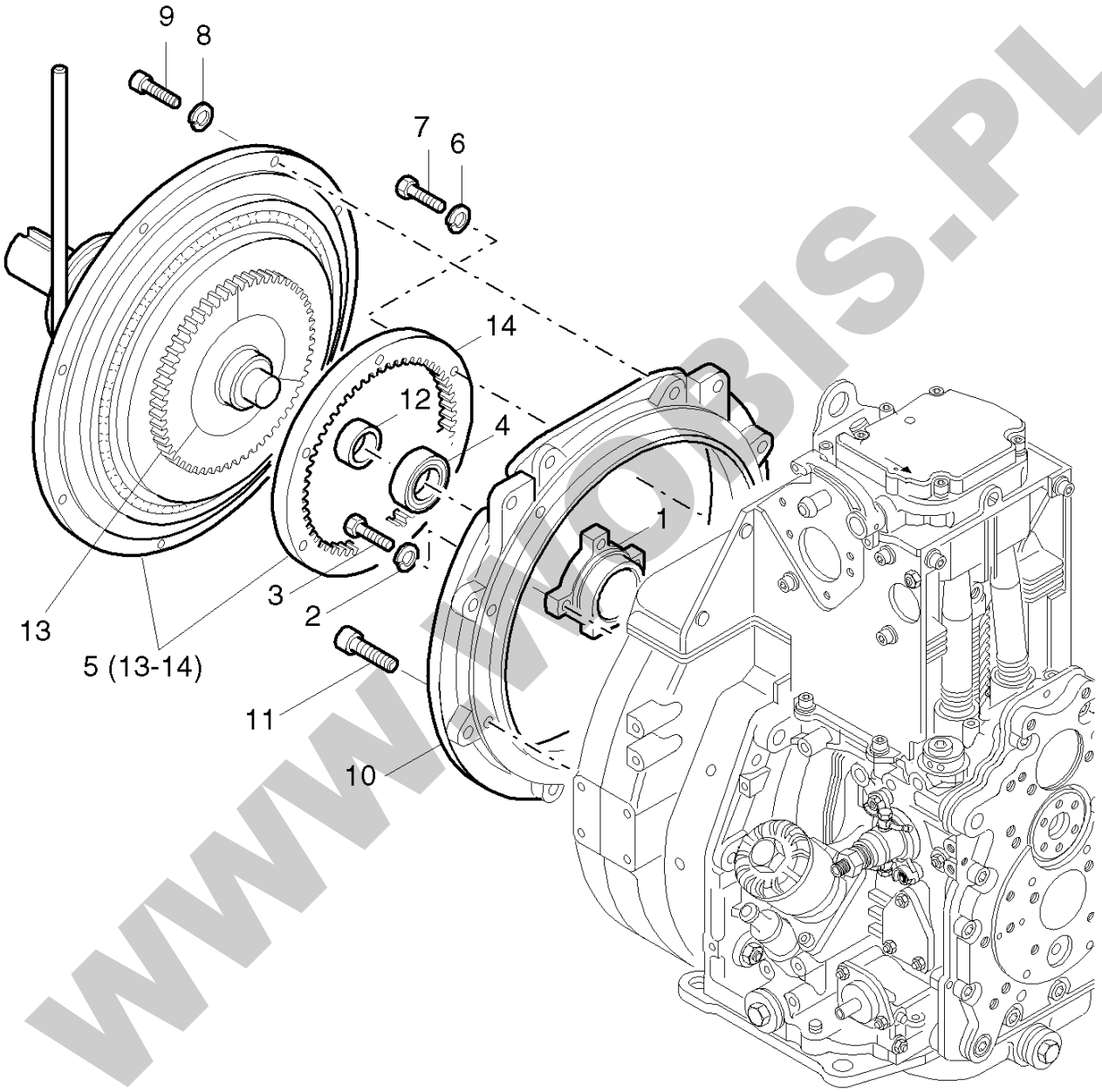

WWW.WOBIS.PL

Pos.	Part no.	Description	Qty.	Parts return	Notice	Add. notice	kg	dDPW	List price
1	000003961200	FLANGE	1				0,310		399,31
2	000050002800	SPRING WASHER 8	4		8 DIN 128		0,001		0,46
3	000050026800	HEXSCREW M 8X 20	4		M 8 x 20 DIN 933-8.8		0,012		2,37
4	000050014100	GROOV.BALLBEAR.6205	1		DIN 625 6205 2RS		0,128		62,79
5	000050349300	CLUTCH BD 110/15	1		BD 110/15 -5-6,5ZOLL		20,400		6295,93
6	000050002800	SPRING WASHER 8	6		8 DIN 128		0,001		0,46
7	000050027000	HEXSCREW M 8X 25	6		M 8 x 25 DIN 933 - 8.8		0,014		2,46
8	000050135600	SPRING WASHER 10	8		10 DIN 128 A3C		0,002		0,46
9	000050093400	ALL.SCR.M10X 30	8		M 10 x 30 DIN 912-8.8 A3C		0,028		3,82
10	000003981200	INTERMED.HOUS.SAE 5	1		SAE 5		1,780		1045,77
11	000050327800	ALL.SCR.M10X 35	8		M 10 x 35 DIN 912-8.8 A3C		0,031		3,82
12	000005019900	SPACER BUSH	1		25 x 35 x 8		0,030		19,47
13	000049065800	FRICTION DISC SET	1				0,365		584,95
14	000049070300	DRIVING RING	1				1,021		933,07

WWW.WOBIS.PL

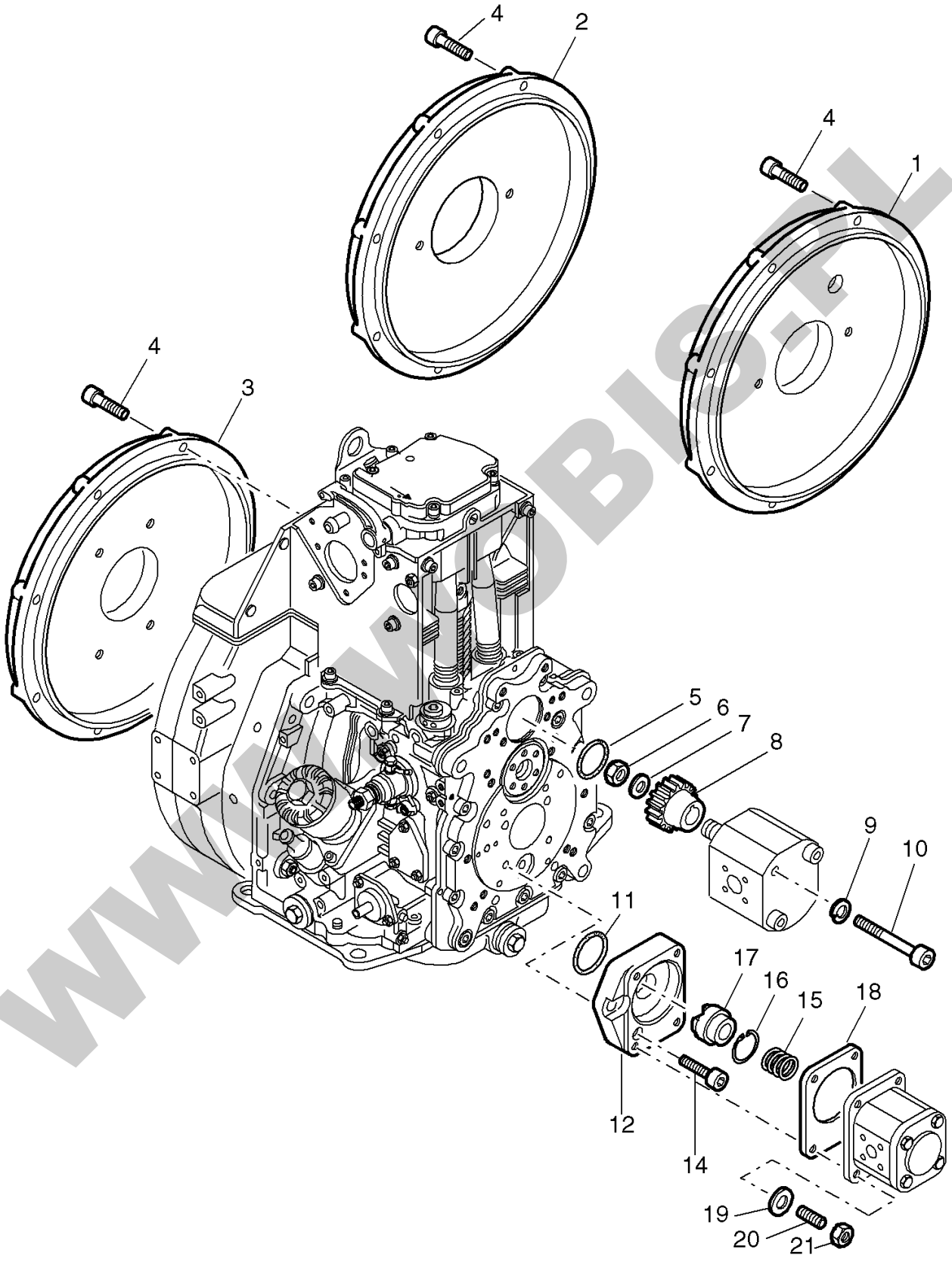

WWW.WOBIS.PL

Pos.	Part no.	Description	Qty.	Parts return	Notice	Add. notice	kg	dDPW	List price
1	000003976301	HOUSING HP SAE A	1		SAE "A" 82,55		2,440		
2	000003976200	HOUSING HP SAE B	1		SAE "B" 101,6		2,300		
3	000003976700	HOUSING HP BOSCH	1		BOSCH 80		2,432		
4	000050055200	ALL.SCR.M10X 60	8		M 10 x 60 DIN 912 - 8.8		0,046		5,78
5	_nopart	Not in this engine	-						
6	_nopart	Not in this engine	-						
7	_nopart	Not in this engine	-						
8	_nopart	Not in this engine	-						
9	_noorder	No single order	-						
10	_noorder	No single order	-						
11	000050375300	O-RING 46X2,5	1		46 x 2,5		0,001		8,87
12	000004036000	INTERMEDIATE FL.HP	1				0,328		458,82
14	000050397900	ALL.SCR.M10X22TUF	4		M 10x22 DIN 912-8.8 A3C TUF 360G		0,020		7,60
15	000004036200	PRESSURE SPRING	1				0,002		7,92
16	000050019700	CIRCLIP 14X1	1		J 14 x 1 DIN 472		0,001		1,27
17	000004035900	SPLINED COUPLING	1		part was replaced by 000001508900		0,077		
18	000003568000	GASKET	1				0,002		6,19
19	000050095100	SPRING WASHER A 8	4		A 8 DIN 137 A3C		0,001		0,46
20	000050037800	STUD M 8X 22	4		M 8 x 22 DIN 835-10.9		0,012		3,09
21	000050148000	HEXAGON NUT M 8	4		M 8 DIN 934-8 A3C		0,005		1,46

WWW.WOBIS.PL

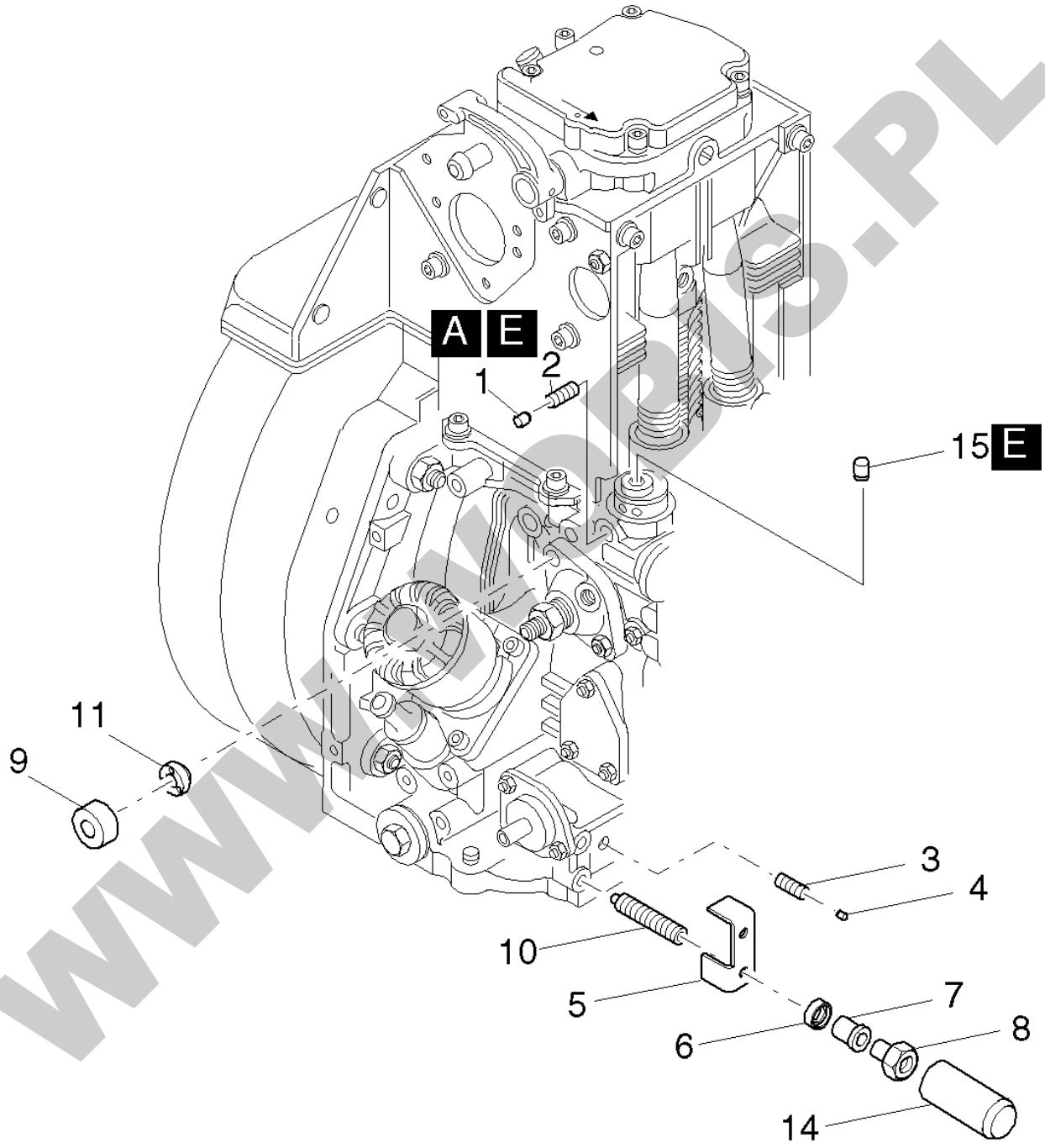

WWW.WOBIS.PL

Pos.	Part no.	Description	Qty.	Parts return	Notice	Add. notice	kg	dDPW	List price
1	000004167010	CLOSING PLUG 6,9	1		6,9		0,001		
2	000050004600	GRUB SCREW M 8X16	1		M 8 x 16 DIN 916-45H A3C		0,003		3,00
3	000050403500	GRUB SCREW M8X20	1		M 8 x 20 DIN 914-45H		0,006		5,01
4	000004153700	CLOSING PLUG 4,15	1		4,15		0,002		
5	000004153800	SUPPORT	1				0,033		
6	000004134200	DISC	1				0,002		
7	000004129700	BUSH	1				0,005		
8	000004126700	THREADED BUSH	1		M6		0,013		
9	000004244500	CAP	2				0,002		
10	000050507800	GRUB SCREW M6X45	2		M 6 x 45		0,007		7,46
11	000004239200	SECURING NUT	2				0,009		
14	000004187700	CAP	1				0,001		
15	000004205900	CLOSING PLUG	1				0,001		
A	000050223001	LOCTITE ACTIVATOR N	1		500 ML DIN 7649		0,580		280,83
E	000050223400	LOCTITE 648	1				0,021		40,04

WWW.WOBIS.PL